COMFORT PACK

Thru-the-Wall Comfort

Heating & Cooling

Installation Guide

Comfort Pack Gas Universal

Condensing Furnace up to 95% AFUE

This unit should be installed in an

Outside Wall For Thru-The-Wall Installation Only!

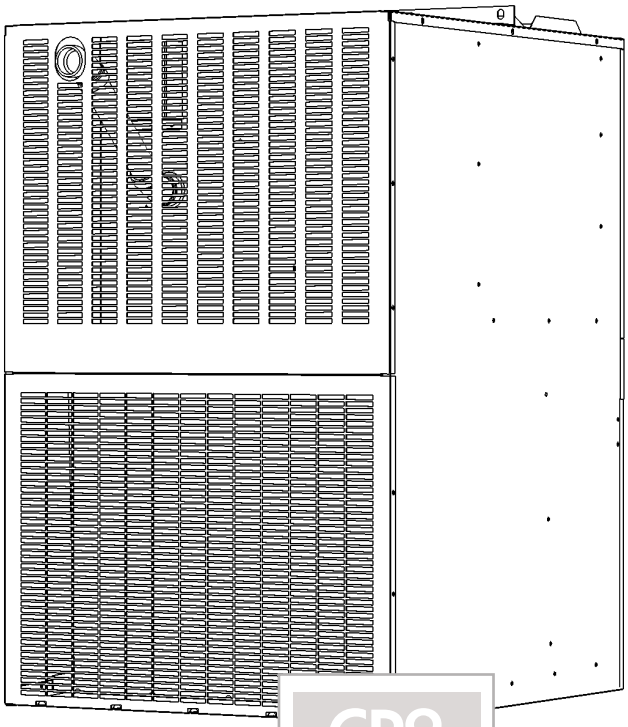

CP9
Universal
R454B

Read Installation Manual
Prior To Starting The Installation.

Please fill in the following information and file it for future reference.

MODEL NO._____

SERIAL NO._____

INSTALL DATE _____

This manual must be left with the homeowner for future reference.

AHRI CERTIFIED® www.ahridirectory.org
Unitary Small AC
AHRI Standard 210/240
Certification applies only when the complete system is listed with AHRI.

AHRI CERTIFIED® www.ahridirectory.org
Residential Furnaces
DOE 10 CFR Part 430

ETL LISTED C US
Intertek
53533

ncp National Comfort Products
An AeriTek Brand
539 Dunksferry Road·Bensalem, PA 19020-5908
(800) 523-7138
www.nationalcomfortproducts.com

Go Thru-the-Wall

Table of Contents

Comfort Pack Nomenclature ..... page 3
Safety Warnings ..... page 4-6
Before You Start ..... page 7
Installation ..... page 8
Drainage ..... page 8-10
Clearance ..... page 11
Unit Location Considerations ..... page 11
Vent Termination Clearances ..... page 12
Electrical ..... page 13-15
Dimensions ..... page 16
Gas Furnace Specifications ..... page 17
Sequence of Operations (Gas Heat) ..... page 17
Abnormal Functions ..... page 18
High Altitude Operation ..... page 18
Gas Piping, Venting & Pressures ..... page 20-21
Ignition System ..... page 22
Start up ..... page 23-24
Special Notes for Extremely Cold Weather Areas ..... page 24
Maintenance and Service ..... page 25
Slide Out Furnace Instructions ..... page 30-31
Equipment Specifications ..... page 32
Air Flow ..... page 34-35
Wiring Diagram ..... page 36
Troubleshooting ..... page 37-38
Replacement Parts Guide ..... page 39-40
Warranty ..... page 42-43

IMPORTANT NOTE: DO NOT DESTROY OR DISCARD THIS MANUAL.
IT SHOULD BE KEPT IN A SAFE PLACE FOR FUTURE REFERENCE.

Comfort Pack Nomenclature

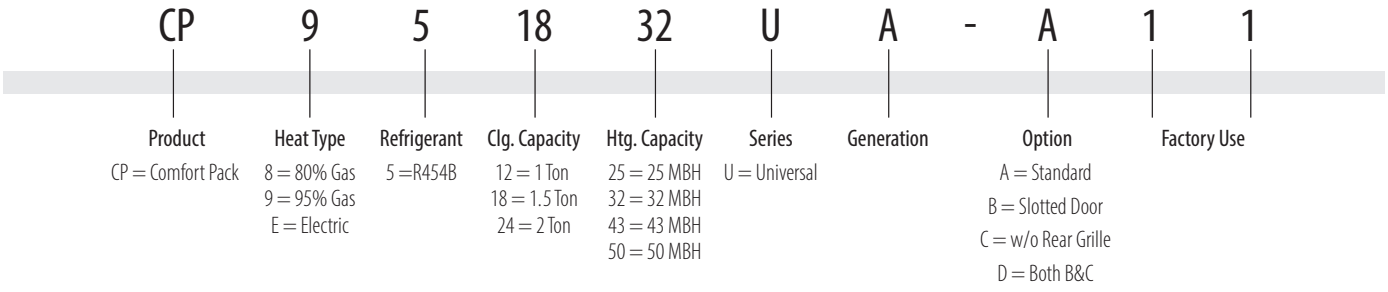

Safety Warnings!

This appliance is not intended for use by those (including children) with reduced physical, sensory or mental capabilities, or lack of experience and knowledge, unless they have been given supervision or instructions concerning use of the appliance by a person responsible for their safety. Children should be supervised to ensure that they do not play with the appliance.

This appliance is intended to be installed up to 10,000 ft (3,000 m) above sea level. If the appliance is being installed at more than **2000 ft (610 m)** above sea level, furnace modifications are needed which can be found under **High Altitude Operation** section of this manual.

This appliance only uses **R454B** refrigerant.

This furnace must be installed in accordance with the manufacturer's instructions and local codes. In the absence of local codes, follow the National Fuel Gas Code, ANSI Z223.1 or the CAN/CGA-B149 Installation Codes.

To be installed without alteration.

⚠ This is a safety alert symbol. When you see this symbol on labels or in manuals, be alert to the potential for personal injury.

Pay particular attention to words such as **DANGER, WARNING** or **CAUTION**.

DANGER indicates an imminently hazardous situation, which will result in **serious injury or death**

WARNING indicates a potentially hazardous situation, which could potentially result in **serious injury or death**

CAUTION indicates a potentially hazardous situation, which may result in **minor or moderate injury.** It is also used to alert against practices that are unsafe and can result in property damage.

⚠ HAZARD INTENSITY LEVELS

1. **DANGER: FAILURE TO COMPLY WITH WILL RESULT IN SEVERE PERSONAL INJURY OR DEATH AND/ OR PROPERTY DAMAGE.**
2. **WARNING: FAILURE TO COMPLY COULD RESULT IN SEVERE PERSONAL INJURY OR DEATH AND/ OR PROPERTY DAMAGE.**
3. **CAUTION: FAILURE TO COMPLY COULD RESULT IN MINOR PERSONAL INJURY AND/OR PROPERTY DAMAGE.**

⚠ WARNING

For your safety, do not store or use gasoline or other flammable vapors and liquids in the vicinity of this or any other appliance. Such actions could result in property damage, personal injury, or death.

⚠ AVERTISSEMENT

Pour votre sécurité, n'entreposez ni n'utilisez pas d'essence ou d'autres vapeurs et liquides inflammables à proximité de cet appareil ou de tout autre appareil. De telles actions pourraient entraîner des dommages matériels, des blessures corporelles ou la mort.

⚠ CAUTION

Should overheating occur, or the gas supply fail to shut off, shut off the manual gas valve to the appliance before shutting off the electrical supply.

⚠ PRUDENCE

Si une surchauffe se produit ou si l'alimentation en gaz ne s'éteint pas, éteignez la vanne de gaz manuelle de l'appareil avant d'éteindre l'alimentation électrique.

⚠ WARNING

Warning: Do not use this appliance if any part has been under water. Immediately call a qualified service technician to inspect the appliance and replace any gas control that has been under water.

⚠ AVERTISSEMENT

Avertissement: N'utilisez pas cet appareil si une pièce a été sous l'eau. Appelez immédiatement un technicien d'entretien qualifié pour inspecter l'appareil et remplacer tout contrôle de gaz qui a été sous l'eau.

⚠ WARNING

All working personnel for maintenance, service, and repair operations must be certified from a national training organization or manufacturer that is accredited to teach the relevant national competency standards. Attempting to install or repair this unit without such background may results in product damage, personal injury or death.

⚠ AVERTISSEMENT

Tout le personnel de travail pour les opérations d'entretien, de service et de réparation doit être certifié par un organisme de formation national ou un fabricant accrédité pour enseigner les normes de compétence nationales pertinentes. Tenter d'installer ou de réparer cette unité sans un tel arrière-plan peut entraîner des dommages au produit, des blessures corporelles ou la mort.

⚠ WARNING

HIGH VOLTAGE! Disconnect ALL power before servicing. Multiple power sources may be present. Failure to do so may result in property damage, personal injury or death.

⚠ AVERTISSEMENT

HAUTE TENSION! Débranchez TOUTE l'alimentation avant l'entretien. Plusieurs sources d'alimentation peuvent être présentes. Le non-respect de cette consigne peut entraîner des dommages matériels, des blessures corporelles ou la mort.

⚠ CAUTION

Use care when handling compressors. Some temperatures could be hot!

⚠ PRUDENCE

Faites attention lorsque vous manipulez des compresseurs. Quelques températures pourrait être chaud !

⚠ CAUTION

Scroll compressors should NEVER be used to evacuate the air conditioning system. Vacuums this low can cause internal electrical arcing resulting in a damaged or failed compressor.

⚠ PRUDENCE

Les compresseurs à spirale ne doivent JAMAIS être utilisés pour évacuer le système de climatisation. Des vides aussi bas peuvent provoquer un arc électrique interne entraînant un compresseur endommagé ou défaillant.

⚠ WARNING

The unit must be permanently grounded. **Failure to do so can cause electrical shock resulting in severe personal injury or death.**

⚠ AVERTISSEMENT

L'unité doit être mise à la terre en permanence. **Le défaut de le faire peut provoquer un choc électrique entraînant des blessures graves ou la mort.**

"USE COPPER SUPPLY WIRES ONLY"

⚠ WARNING

Do not use means to accelerate the defrosting process or to clean, other than those recommended by the manufacturer.

The appliance shall be stored in a room without continuously operating ignition sources (for example:open flames, an operating gas appliance or an operating electric heater.

Do not pierce or burn.

Be aware that refrigerants may not contain an odor.

⚠ AVERTISSEMENT

Nutilisez pas de moyens pour accélérer le processus de dégivrage ou pour nettoyer, autres que ceux recommandés par le fabricant.

Lappareil doit être stocké dans une pièce sans sources dinflammation fonctionnant en continu (par exemple : flammes nues, un appareil à gaz en fonctionnement ou un radiateur électrique en fonctionnement.

Ne pas percer ou brûler.

Sachez que les réfrigérants peuvent ne pas contenir dodeur.

⚠ WARNING

If the information in this manual is not followed exactly, a fire or explosion may result causing property damage, personal injury or loss of life.

Do NOT store or use gasoline or other flammable vapors and liquids in the vicinity of this or any other appliance.

WHAT TO DO IF YOU SMELL GAS:

- Do NOT try to light any appliance.
- Do NOT touch any electrical switch; do not use any phone in your building.
- Immediately call your gas supplier from a neighbor's phone. Follow the gas supplier's instructions.
- If you cannot reach your gas supplier, call the fire department.

Installation and service must be performed by a qualified installer, service agency or the gas supplier.

⚠ AVERTISSEMENT

Si l'information contenue dans ce manuel n'est pas suivie exactement, un incendie ou une explosion peut causer des dommages matériels, des blessures corporelles ou des pertes de vie.

N'entreposez ni n'utilisez pas d'essence ou d'autres vapeurs et liquides inflammables à proximité de cet appareil ou de tout autre appareil.

QUE FAIRE SI VOUS SENTEZ DU GAZ :

- N'essayez PAS d'allumer un appareil.
- Ne touchez aucun interrupteur électrique; n'utilisez aucun téléphone dans votre immeuble.
- Appelez immédiatement votre fournisseur de gaz à partir du téléphone d'un voisin. Suivez les instructions du fournisseur de gaz.
- Si vous ne parvenez pas à joindre votre fournisseur de gaz, appelez le service d'incendie.

L'installation et le service doivent être effectués par un installateur qualifié, une agence de service ou le fournisseur de gaz.

⚠ WARNING

Improper installation, adjustment, alteration, service, or maintenance can cause property damage, personal injury or loss of life. Refer to the user's information manual provided with this furnace. Installation and materials, service must be performed by a qualified installer, service agency or the gas supplier.

⚠ AVERTISSEMENT

L'installation, l'ajustement, la modification, le service ou l'entretien de mproper peuvent causer des dommages matériels, des blessures corporelles ou des pertes de vie. Consultez le manuel d'information de l'utilisateur fourni avec ce four. Installation et matériaux, le service doit être effectué par un installateur qualifié, une agence de service ou le fournisseur de gaz.

⚠ CAUTION

These units are not approved for mobile home applications. Such use could result in property damage, personal injury, or death.

⚠ PRUDENCE

Ces unités ne sont pas approuvées pour les applications de maison mobile. Une telle utilisation pourrait entraîner des dommages matériels, des blessures corporelles ou la mort.

⚠ WARNING

If any of the original wire as supplied with the furnace must be replaced, it must be replaced with wiring material having a temperature rating of at least 90°C.

This furnace must be installed so there are provisions for ventilating air.

Should overheating occur, or the gas supply fail to shut off, shut off the manual gas valve to the furnace before shutting off the electrical supply.

⚠ AVERTISSEMENT

Si l'un des fils d'origine fournis avec le four doit être remplacé, il doit être remplacé par un matériau de câblage ayant une température nominale d'au moins 90°C.

Ce four doit être installé afin qu'il y ait des dispositions pour ventiler l'air.

En cas de surchauffe ou si l'alimentation en gaz ne s'éteint pas, éteignez la vanne de gaz manuelle du four avant d'éteindre l'alimentation électrique.

⚠ WARNING

These instructions are intended as an aid to qualified, licensed service personnel for proper installation, adjustment and operation of this unit. Read these instructions thoroughly before attempting installation or operation. Failure to follow these instructions may result in improper installation, adjustment, service or maintenance possibly resulting in fire, electrical shock, property damage, personal injury or death.

⚠ AVERTISSEMENT

Ces instructions sont destinées à aider le personnel de service qualifié et autorisé pour l'installation, le réglage et le fonctionnement appropriés de cette unité. Lisez attentivement ces instructions avant de tenter l'installation ou l'opération. Le non-respect de ces instructions peut entraîner une installation, un ajustement, un entretien ou un entretien inappropriés pouvant entraîner un incendie, un choc électrique, des dommages matériels, des blessures corporelles ou la mort.

⚠ WARNING

Do not use oxygen to purge lines or pressurize system for leak test. Oxygen reacts violently with oil, which can cause an explosion resulting in severe personal injury or death.

⚠ AVERTISSEMENT

N'utilisez pas d'oxygène pour purger les conduites ou pressuriser le système pour l'essai d'étanchéité. L'oxygène réagit violemment avec l'huile, ce qui peut provoquer une explosion entraînant de graves blessures corporelles ou la mort.

⚠ WARNING

Gas-fired appliances are not designed for use in hazardous atmospheres containing flammable vapors or combustible dust, in atmospheres containing chlorinated or halogenated hydrocarbons, or in applications with airborne silicone substances. See hazard levels below.

⚠ AVERTISSEMENT

Les appareils à gaz ne sont pas conçus pour être utilisés dans des atmosphères dangereuses contenant des vapeurs inflammables ou de la poussière combustible, dans des atmosphères contenant des hydrocarbures chlorés ou halogénés, ou dans des applications avec des substances siliconées en suspension dans l'air. Voir les niveaux de danger ci-dessous.

Before You Start

This unit is shipped with a cooling chassis installed in the cabinet. Prior to installing the unit in the wall opening, the shipping bolts located at the bottom on both sides of the cabinet must be removed to allow for removal of the cooling chassis. 1/4" hole plugs provided with the unit should be installed in the holes to prevent air leakage. Shipping bolts are located on both sides below this sticker:

THE SHIPPING BOLTS MUST BE REMOVED PRIOR TO INSTALLATION OF THE CABINET TO PERMIT REMOVAL OF THE CHASSIS. INSTALL THE HOLE PLUGS PROVIDED.

14299588

This unit is designed and approved for through-the-wall installation only. The unit must be installed a minimum of 8" above finish floor. If this unit is installed in a residential garage, it must be installed so that the ignition source and burners are located not less than 18 inches (457 mm) above the floor, and it must be located or protected to avoid physical damage by vehicles. The entire unit must not be installed outside. The grille side of the unit should extend 3/4" beyond the exterior wall to allow moisture that may enter the outdoor section to drain. The pitch of the internal drain pans toward the outside will assure proper drainage when the cabinet is installed level. **Masonry walls must have a lintel to support the wall.**

The interior of the unit may be installed with zero clearances to adjacent combustible surfaces. **The unit shall not be installed directly on carpeting, tile or other combustible material, except wood flooring.** In order to be able to remove the chassis, 29" of open area must be left unobstructed in front of the access panels. The 3/4" O.D. drain pan connection should be connected to the building drain using the flexible tubing included and a trap. The secondary drain offers protection from overflow. The secondary drain feature is piped into the base of the unit and drains through the weep holes outside. Reconnect 3" piece of clear flexible tubing to secondary drain on drain pan. Position secondary drain through grommet of chassis and connect to flexible tubing (prime trap prior to operating).

Local codes should be followed to route the furnace condensate to the proper drainage. The furnace condensate drain kit provides materials for two different drain locations described later in this manual (Page 10). Ensure that the condensate is able to freely drain through the lines with minimal condensate buildup to prevent line freezing during low ambient conditions

The grille side must be kept free of any obstructions that will reduce or alter the air flow pattern. **The unit must be installed at least 4 feet (1.22 m) from electric meters, gas meters, regulators, and relief equipment. The vent of the unit is located at the front grille. Distances from adjacent public walkways, adjacent buildings, openable windows, and building openings must be consistent with the National Fuel Gas Code ANSI Z223.1 and/or CAN/CGA-B149 installation codes, as well as local codes.**

If an optional architectural grille is to be used on standard units, the stamped grille provided **must** be removed. Consult the factory prior to ordering product(s) that require an optional architectural grille.

The area shall be checked with an appropriate refrigerant detector prior to and during work, to ensure the technician is aware of potentially toxic or flammable atmospheres. Ensure that the leak detection equipment being used is suitable for use with all applicable refrigerants, i.e. non-sparking, adequately sealed or intrinsically safe.

Appropriate leak detection methods include an electronic leak detection device or liquid soap bubble method on chassis weld joints.

⚠ CAUTION

The installation of this appliance must conform to the requirements of the National Fire Protection Association; the National Electric Code, ANSI/NFPA No. 70 (latest edition) in the United States; the Canadian Electrical Code Part 1, CSA 22.1 (latest edition) in Canada; and any state or provincial laws or local ordinances. Local authorities having jurisdiction should be consulted before installation is made. Such applicable regulations or requirements take precedence over the general instructions in the manual.

⚠ PRUDENCE

L'installation de cet appareil doit être conforme aux exigences de la national fire protection association ; The National Electric Code, ANSI/NFPA no. 70 (Dernière édition) aux États-Unis ; la partie 1 du code Canadien de l'électricité, lmmc 22.1 (Le plus récent Édition) au Canada; et toutes les lois étatiques ou provinciales ou les ordonnances locales. Les autorités locales compétentes devraient être consultées avant l'installation. De tels règlements ou exigences applicables prennent préséance sur l'instruction générale.

To remove the chassis from the cabinet:

Turn off power to the unit. Remove the lower access panel from the cabinet. Disconnect the drain line from the evaporator coil drain connection. Disconnect the secondary drain flexible tubing & trap to avoid damage (prime trap when reinstalling). Depress and hold the release latch on the chassis power wiring connector and unplug it from the cabinet power wiring connector. Depress and hold the release latch on the control wiring connector and unplug it from the cabinet control wiring connector.

Remove the screws attaching the controls enclosure to the indoor coil cover. Remove the screws from the indoor blower cover plate. Remove the plate from the unit. Temporarily secure the chassis power and control wiring and connectors to the top of the indoor coil cover to prevent damage during chassis removal.

Carefully slide the chassis out of the cabinet by grasping both sides of the evaporator coil drain pan and pulling toward you while keeping the chassis centered in the cabinet. As the chassis is removed, keep the chassis level until the outdoor fan cover passes the cabinet seals. Damage to the cabinet seals will result if the chassis is not kept level until the outdoor fan cover has passed the cabinet seals. After the chassis is removed, it should be handled using the chassis base and evaporator drain pan, not by using refrigerant piping or the outdoor fan mount. The bottom of the chassis is not smooth and will damage floors if slid.

To install the chassis into the cabinet:

Turn off power to the unit. Temporarily secure the chassis power and control wiring and turn off power to the unit. Temporarily secure the chassis power and control wiring and connectors to the top of the indoor coil cover to prevent damage during chassis installation. Place the outdoor coil section of the chassis onto the cabinet rails. Lift the rear of the chassis using the evaporator coil drain pan so that the chassis is level and centered as it is pushed in the cabinet. **Damage to the cabinet seals will result if the chassis is not kept level until the outdoor fan cover has passed the cabinet seals, and the chassis kept centered in the cabinet.** After the chassis is all the way in the cabinet, check that the chassis is centered in the cabinet by verifying that it is in contact with the cabinet seals on both sides.

Install the indoor blower cover plate and secure it with screws. Install the chassis power wire connector and the control wiring connector into their respective cabinet wiring connectors so that the connectors latch. Connect the drain line to the evaporator coil drain connection. Reconnect 3" piece of

clear flexible tubing to secondary drain on drain pan. Position secondary drain through grommet of chassis and connect to flexible tubing (prime trap prior to operating). Install the lower access panel on the cabinet. Turn on power to the unit.

ALL phases of this installation must comply with NATIONAL, STATE AND LOCAL CODES. The manufacturer assumes no responsibility for equipment installed in violation of any code requirements.

Be sure that the electrical data specified on the unit rating plate corresponds to what is available at the installation site and NEC for installation requirements.

This unit MUST be installed in an outside wall for thru-the-wall installation ONLY.

Be sure that the electrical service provided to the building can handle the load imposed by the unit.

IMPORTANT — This Document is customer property and is to remain with this unit. Please refer to service information pack upon completion of work to register the unit's warranty. These instructions do not cover all variations in systems or provide for every possible contingency to be met in connection with the installation. Should further information be desired or should particular problems arise which are not covered sufficiently for the purchaser's purposes, the matter should be referred to your installing dealer or local distributor before contacting the manufacture.

Note: The unit must never be placed on its side or upside down as the compressor oil will run in the cooling circuit and seriously damage the unit.

Installation

⚠ WARNING

The area where the appliances is installed shall be constructed that should any refrigerant leak, it will not stagnate so as to create a fire or explosion hazard.

Auxiliary devices which may be a potential ignition source shall not be installed in the duct work. Examples of such potential ignition sources are hot surfaces with a temperature exceeding 1292°F (700°C) and electric switching devices.

⚠ AVERTISSEMENT

La zone où les appareils sont installés doit être construite de manière à ce qu'en cas de fuite de réfrigérant, il ne stagne pas de manière à créer un risque d'incendie ou d'explosion.

Les dispositifs auxiliaires qui peuvent être une source d'inflammation potentielle ne doivent pas être installés dans les conduits. Des exemples de telles sources d'inflammation potentielles sont les surfaces chaudes avec une température supérieure à 1292°F (700°C) et les dispositifs de commutation électrique.

Note: Installation and maintenance instructions should be left with the unit for future reference.

This unit must be installed in accordance with all applicable codes. This unit is not to be used for temporary heating of buildings or structures under construction.

FOR MAXIMUM PERFORMANCE, IT IS IMPERATIVE THAT THE COOLING CHASSIS AIR DIVIDER BE SEALED TO THE CABINET AIR SEAL. ANY LEAKAGE WILL ALLOW OUTSIDE UNCONDITIONED AIR TO INFILTRATE AND MIX WITH THE CONDITIONED AIR. THIS CONDITION WILL DEGRADE UNIT PERFORMANCE. ALL UNITS SHOULD BE INSPECTED FOR THIS CONDITION, AS DURING TRANSPORTATION AND INSTALLATION THE SEALS CAN BE DISTURBED. IF REQUIRED, A LIGHT BEAD OF CAULKING IS RECOMMENDED TO SEAL THE CHASSIS TO THE AIR SEAL TO ELIMINATE LEAKAGE.

OUTSIDE UNCONDITIONED AIR MUST NOT BE INTRODUCED INTO THE RETURN AIR STREAM OF THIS UNIT IF THE MIXED AIR TEMPERATURE FALLS BELOW 55°F IN HEATING MODE AT DESIGN CONDITIONS. THIS CONDITION MAY ALSO DEGRADE THE PERFORMANCE OF THE UNIT AND IMPROPER APPLICATIONS COULD VOID EQUIPMENT WARRANTY.

The unit must be installed through an exterior wall with the back end extending 3/4" past the outside wall surface. Provide support inside the building for the unit near the return air opening. There should be enough clearance around the supports to route return ductwork to the unit or allow for unrestricted airflow in an open return configuration. To reduce the possible transmission of sound and vibration, a resilient material such as rubber or cork should be installed between the support and the base of the unit. All spaces around the top, sides, and bottom of the exterior grille area should be caulked and sealed to the wall, making sure that the openings for drainage in the bottom edge are not blocked.

If the optional wall sleeve is used, caulk the spaces between the sleeve and the wall. Completely fill the clearance on all sides between the unit and the wall sleeve with a polyurethane foam sealant.

Note: For ease of installation, install the cabinet into the wall sleeve firstwithout the cooling chassis. Then slide cooling chassis in after cabinet is in place.

Evaporator Drainage

The 3/4" I.D. flexible tubing included should be connected to the Comfort Pack primary drain connection so that it can easily be disconnected if the cooling chassis must be removed. A trap at least 2" deep should be provided close to the drain pan. The tubing should not be higher than the bottom of the unit drain pan at any point to assure proper drainage and allow chassis removal. The drain line should pitch downward at least 1" per 10 ft. to an open building drain trap.

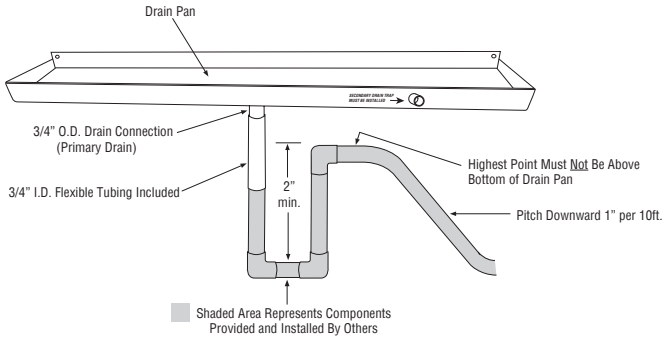

Secondary Evaporator Drain Trap Install Instructions:

1. The trap and 2" piece of clear flexible 1/2" ID tubing are shipped loose to prevent damage. They should be installed after the Comfort Pack unit is installed and the return air connection completed.

2. The trap must be primed (filled with water) for proper operation of the secondary drain system. This may be done prior to installation of the trap or after.

3. Insert trap into the grommet located in chassis base pan.

a. Apply force to section 1 (refer to drawing below)

b. Ensure at least .5" - 0.75" of tubing is inserted into the grommet

c. PVC should be flush with drain pan connection

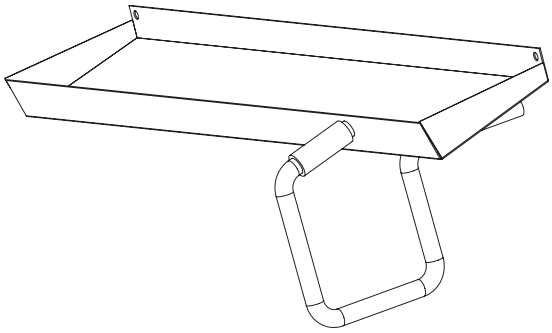

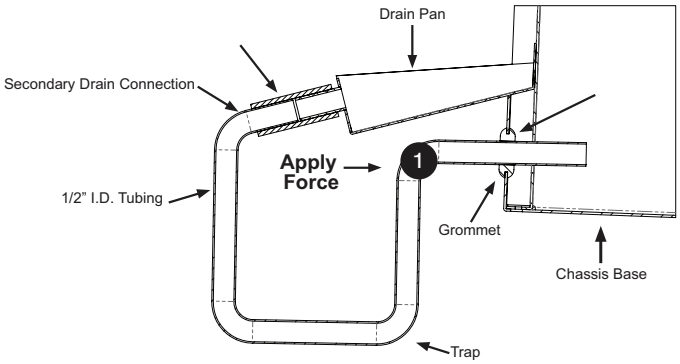

4. Position the trap as shown and slide the 2" piece of clear flexible tubing about 1” onto the top end of the trap. Slide the top of the flexible tube on the trap onto the bottom of the 1/2" OD secondary drain connection and push the top of the trap up. The trap should be positioned so that there is only a small gap between the top of the trap and the bottom of the secondary drain connection.

5. To avoid damage whenever the slide-out chassis has to be removed from the cabinet, remove the secondary drain trap before sliding the chassis out. After the chassis is reinstalled in the cabinet, prime the trap with water before reinstalling it.

Furnace Condensate Drainage

Note: The high efficiency furnaces produce condensate during operation. In unconditioned spaces, the condensate may be susceptible to freezing. Ensure the condensate is able to drain freely and proper care is taken to prevent drain line freezing.

A Condensate Drain Kit is provided with the unit. It contains a waterless trap, 2-piece waterless trap bracket, vinyl drain tubing, and two sheet metal screws.

Instructions for installing furnace drain kit:

- Remove the bottom access panel by unscrewing the thumb screws on each side.
- Remove the 2-piece bracket for the waterless trap from the parts bag and assemble on the side panel using the image below for reference. Sheet metal screws provided in parts bag should attach to the bracket from inside of the cabinet facing outwards in order to properly secure the bracket tightly.
- Insert the rubber tubing into the waterless trap and set inside of the bracket for proper alignment.
- Connect the vinyl drain tubing to the bottom side of the waterless trap.
- Follow all applicable codes to route condensate from the waterless trap to on-site drainage.

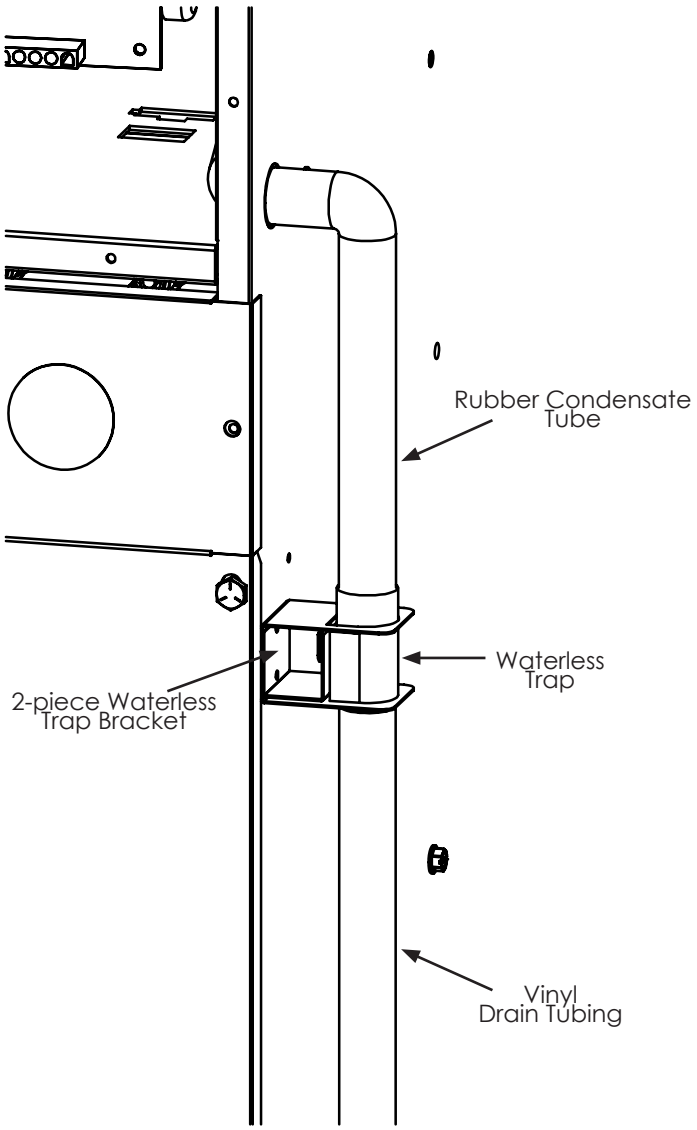

External Draining

The condensing furnace external drainage is critical to the furnaces continued operation. Tubing must be directed into an air break before any other drainage is tied into the unit. This includes the condensate drain for the cooling section.

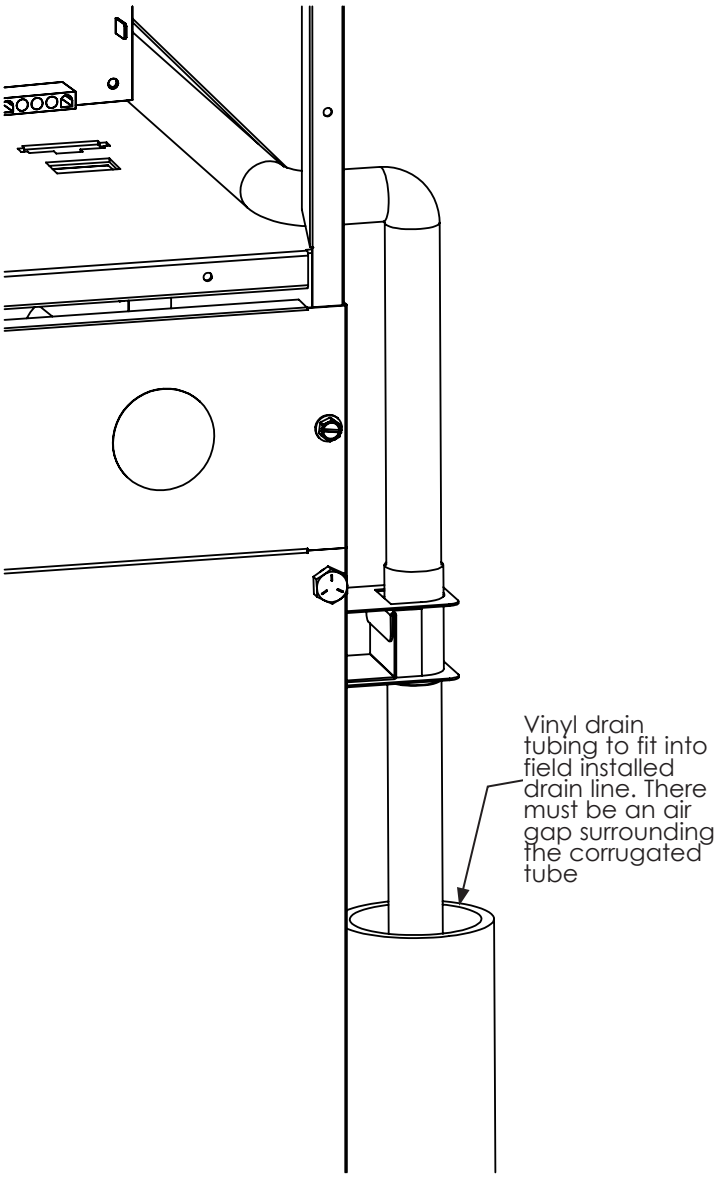

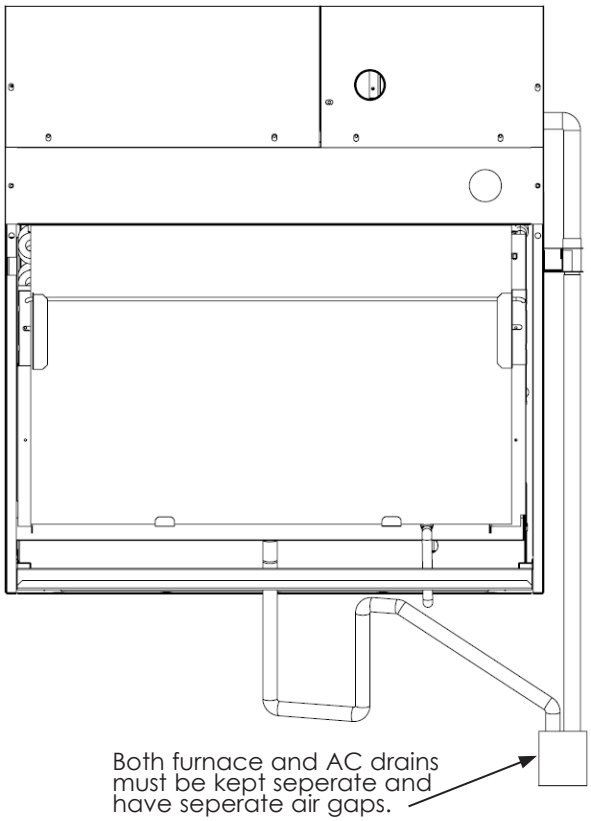

Note: The furnace drain must be in a conditioned space and in some cases additional means for heating the drain line (such as heat tape) will be necessary to avoid freezing.

Clearances

For proper unit performance and maximum operating life please maintain the following minimum installation clearances.

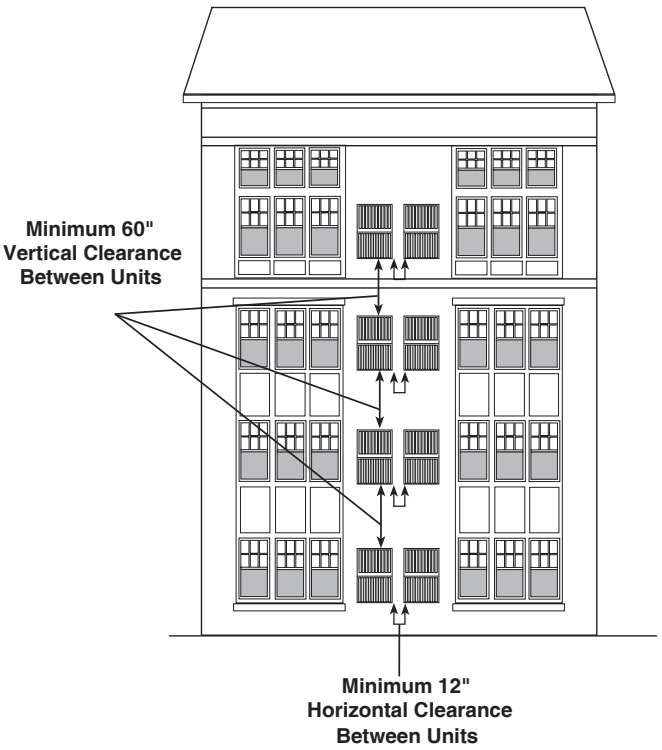

*Less than 12" Call National Comfort Products

Comfort Pack units must be installed through an outside wall. Confined spaces and/or covered areas should be avoided. Consult the factory if unclear of clearances required. Units must be installed a minimum of **12"** apart when two units are side by side. If three or more units are to operate next to one another, allow a minimum of **60"** between units or pairs of units. Also, a vertical clearance of **60"** should be maintained between units. Units installed on the bottom floor should be mounted at least **8"** off of the ground.

The unit is designed and approved for thru the wall installation only. The unit must be installed a minimum of **8"** above a finished floor. If the unit is installed in a residential garage, it must be installed so that the ignition source and burners are located not less than **18"** above the floor, and it must be located or protected to avoid physical damage by vehicles.

Unit Location Considerations

In thru-the-wall installation, due to the various types of wall construction, it is not possible to provide detailed instructions. The following is a list of general requirements and cautions for installing these units.

The unit must be installed level, both - top front to back and left to right.

1. Masonry walls must have a lintel to support the wall.

2. Extend the unit approximately 3/4" beyond outside surface of the wall. Optional mounting angles can be purchased from the factory or field fabricated for locating and mounting the unit in the wall.

3. The wall opening across the top and bottom must be flashed.

a. During periods of rain and wind the primary drainage path may not be adequate to handle the load. Secondary precautions may also be required but not limited to the following:

- Seal flashing to unit
- Floor drain
- Additional field sealing of sheet metal joints
- Sealing of unused access opening

4. Clearances to air inlets and outlets must be adequate to ensure no air flow obstructions or recirculation of condenser air flow.

5. Some architectural designs of buildings will require the unit to be mounted behind a decorative grille. The performance (capacity and efficiency) of the unit may be reduced with the use of these decorative grilles. The less resistive these grilles are to air flow, the better the units performance will be. Outdoor louvers provided by others must be approved by NCP to maintain unit performance and warranty. **Care must be taken to locate the condenser coil away from loose debris that may clog intake.**

6. If the unit is mounted behind a decorative grille, one or both of the following items must be done to eliminate recirculation of air to the unit:

a. The front of the unit must be mounted tight to the inside of the architectural grille

b. A barrier must be provided to prevent recirculation of air to the unit (mixing of inlet and outlet air) when the front of the unit is mounted back from the inside of the architectural grille

7. The unit must not be mounted in dead-end hallways or areas where there is no fresh outside air circulation. Cool fresh outside air must be provided for best unit operation. Thru-the-wall units may not be located where hot exhausts from clothes dryer vents, kitchen vents, steam vents or corrosive fumes could come in contact with coil side of unit.

8. 30" clearance is required for service accessibility on the inside service panel.

9. If more than one unit is to be installed in the same area a min. of 60" vertical must be maintained between units to minimize recirculation of condenser exhaust air.

10. Care must be taken when locating the unit. Locate away from bedrooms as operational sounds may be objectionable.

*For other clearance information see page 12

Vent Termination Clearances for Direct Vented Installations in the USA

For other gas venting information see page 22.

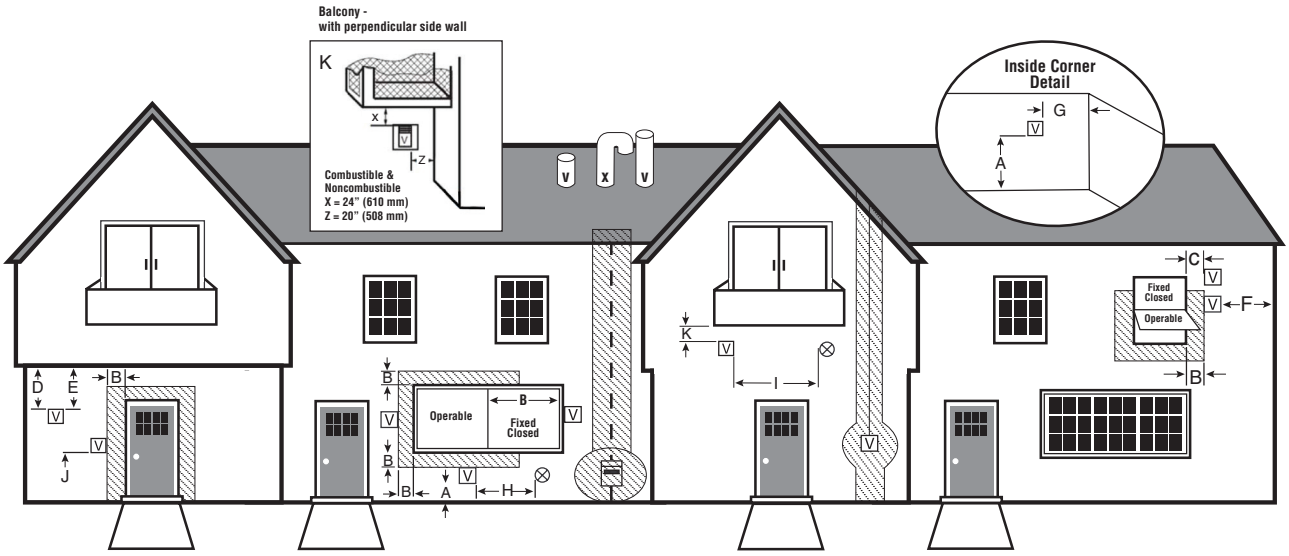

Item	Clearance Description	US Installations (per ANSI Z223.1/NFPA 54)
A	Clearance above grade, veranda, porch, balcony or anticipated snow level	12 in.
B	Clearance to a window or door that may be opened	9 in. for appliances > 10,000 Btu/h (3 kW) and ≤ = 50,000 Btu/h (15 kW), 12 in. for appliances > 50,000 Btu/h (15 kW)
C	Clearance to a non-openable window	For clearances not specified in ANSI Z223.1/NFPA 54, clearances shall be in accordance with local installation codes and the requirements of the gas supplier and the manufacturer's installation instructions. See Note 1
D	Vertical clearance to ventilated soffit located above the terminal within a horizontal distance of 2 ft (610 mm) from the center line of the terminal	
E	Clearance to an unventilated soffit	
F	Clearance to an outside corner of building	
G	Clearance to an inside corner of building	
H	Clearance to non-mechanical air supply inlet to building or the combustion air inlet to any other appliance	9 in. for appliances > 10,000 Btu/h (3 kW) and ≤ = 50,000 Btu/h (15 kW), 12 in. for appliances > 50,000 Btu/h (15 kW)
I	Clearance to a mechanical air supply inlet	10 ft horizontally from inlet or 3 ft above inlet
J	Clearance above paved sidewalk or paved driveway located on public property or other areas where condensate or vapor can cause a nuisance or hazard	7 ft and not located above public walkways or other areas where condensate or vapor can cause a nuisance or hazard See Notes 1 & 2
K	Clearance to underside of veranda, porch, deck, or balcony	12 in. where the area beneath the veranda, porch, deck, or balcony is open on not less than two sides. The vent terminal is prohibited in this location where only one side is open.

Note: This table is based upon National codes for gas appliances, and are provided as a reference. Refer to Local codes which may supersede the standards and/or recommendations.

Note 1: Avoid venting under a deck or large overhang. Recirculation could occur and cause performance or system problems. Ice build-up may occur.
Note 2: For clearances note specified in ANSI Z223.1/NFPA 54, clearances shall be in accordance with local installation codes and the requirements of the gas supplier and the manufacturer's installation instructions.

The vent for this appliance shall not terminate. **a.** Near the soffit vents or crawl space vents or other areas where condensate or vapor could create a nuisance or hazard or property damage; or **b.** Where condensate vapor could cause damage or could be detrimental to the operation of regulators, relief valves, or other equipment.

Specifications for venting subject to change without notice.

Electrical

All wiring must be installed in accordance with applicable codes.

The unit is factory wired for 230/1/60 power. For 208/1/60 power systems, the wiring to the primary side of the control transformer should be changed from the 240-volt connection to the 208-volt connection to provide proper operation of the control system.

The operating voltage of the unit is from 196 to 244 volts. Operating the equipment outside of these limits will void the warranty.

Electrical Supply and Connections

All electrical wiring and connections, including electrical grounding must be made in accordance with the National Electric Code ANSI/NFPA No. 70 (latest edition) or, in Canada, the Canadian Electrical Code, Part I-C.S.A. Standard C22.1. In addition, the installer should be aware of any local ordinances or utility company requirements that might apply.

Check the rating plate for the supply voltage and current requirements. A dedicated line voltage supply with fused disconnect switch should be run directly from the main electrical panel to the unit. All external wiring must be within approved conduit and have a minimum temperature rise rating of 60°C. Conduit from the disconnect switch must be run so as not to interfere with the service panels.

Controls

Field wiring between the unit and the wall thermostat (by others) may be low voltage for Class 2 systems. The location of the wall thermostat should be 4 to 5 feet above the floor and carefully selected so that the thermostat senses the temperature of the largest conditioned area, without being influenced by drafts, sun exposure or outside temperature.

Note: Make certain that the volts, hertz, and phase correspond to that specified on the unit r*ating plate, and that the service provided by the utility is sufficie*nt to handle the additional load imposed by this equipment.

Electrical Connections

Make all electrical connections in accordance with the National Electrical Code and any pertinent local codes or ordinances. Use a separate branch electrical circuit for this unit. Locate a disconnecting means within sight of and readily accessible to the unit.

a. Line Voltage Connections
b. Connect the single phase power supply to unit fuse blower terminal L1 and L2
c. Connect ground wire to lug
d. Low Voltage Connections

When locating the room thermostat, it should be in the natural circulating path of room air. Avoid locations where the thermostat would be exposed to cold air infiltration; drafts from windows, doors or other openings leading to the outside; exposure to air currents from warm-or-cold air registers or to exposure where the natural circulation of the air is cut off, such as behind doors, above or below mantels, shelves, etc.

Electrical - High Voltage

NOMINAL VOLTAGE	MINIMUM VOLTAGE	MAXIMUM VOLTAGE
208-230	**196**	**244**

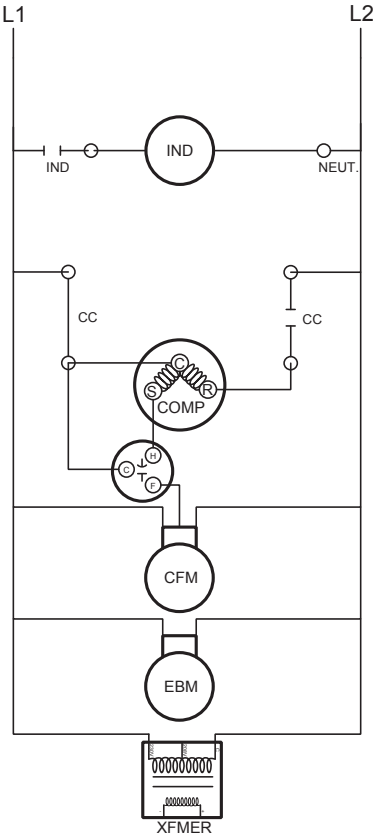

High Voltage Power Supply

⚠ WARNING

LIVE ELECTRICAL COMPONENTS!

During installation, testing, servicing and troubleshooting of this product, it may be necessary to work with live electrical components. Failure to follow all electrical safety precautions when exposed to live electrical components could result in death or serious injury.

⚠ AVERTISSEMENT

COMPOSANTS ÉLECTRIQUES EN DIRECT !

Lors de l'installation, des tests, de l'entretien et du dépannage de ce produit, il peut être nécessaire de travailler avec des composants électriques en direct. Non-respect de tous les appareils électriquesles précautions de sécurité en cas d'exposition à des composants électriques sous jour pourraient entraîner la mort ou des blessures graves.

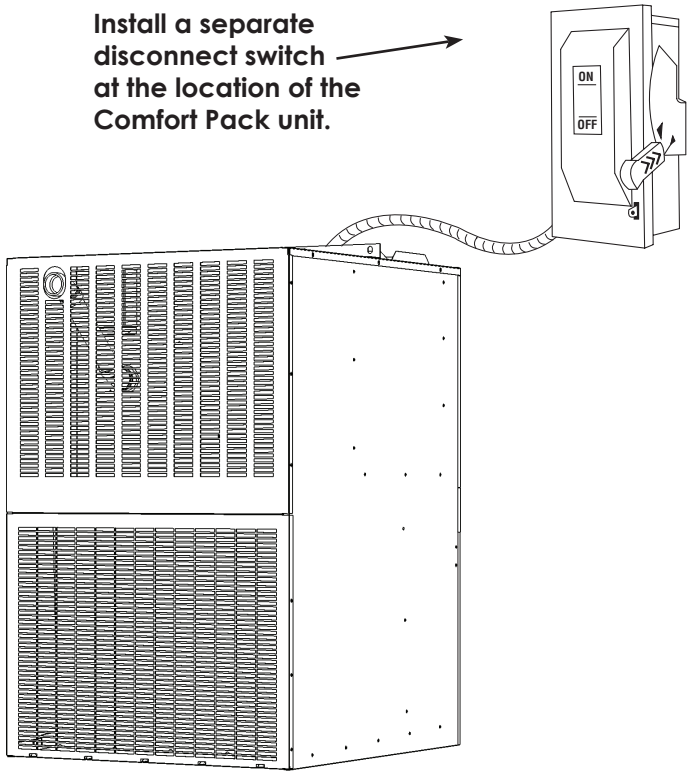

The high voltage power supply must agree with the equipment nameplate.

OR

Make certain that the volts, hertz, and phase correspond to that specified on the unit rating plate, and that the service provided by the utility is sufficient to handle the additional load imposed by this equipment.

Power wiring must comply with national, state, and local codes.

Follow instructions on unit wiring diagram located on the inside of the access door and in the wiring diagrams included with the unit.

Electrical - Low Voltage

Low Voltage Maximum Wire Length

Table defines the maximum total length of low voltage wiring from the outdoor unit, to the indoor unit and to the thermostat.

24 VOLTS	
WIRE SIZE	MAX. WIRE LENGTH
18 AWG	150 Ft.
16 AWG	225 Ft.
14 AWG	300 Ft.

DSI Control Identification

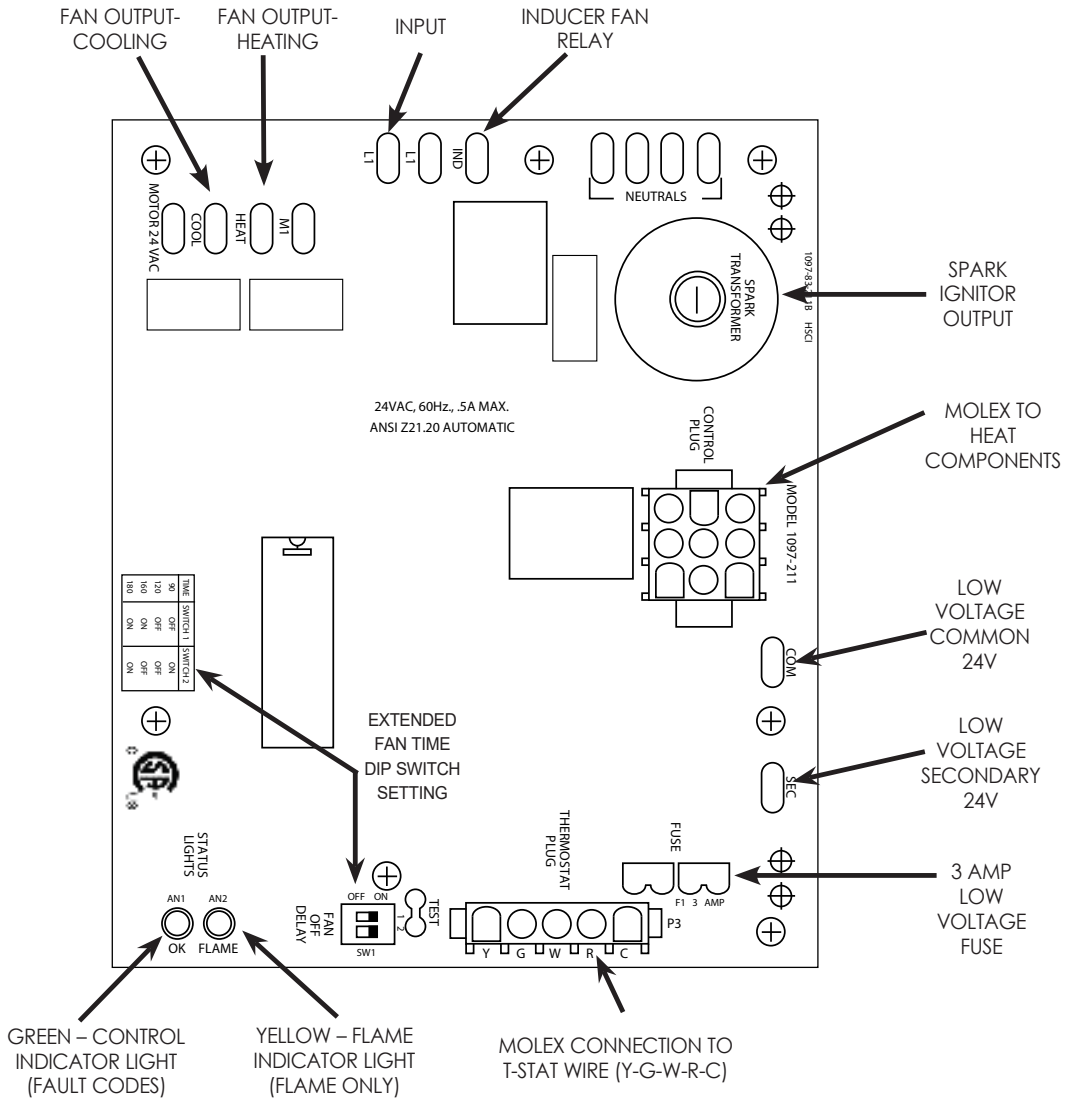

Comfort Pack Dimension Drawing

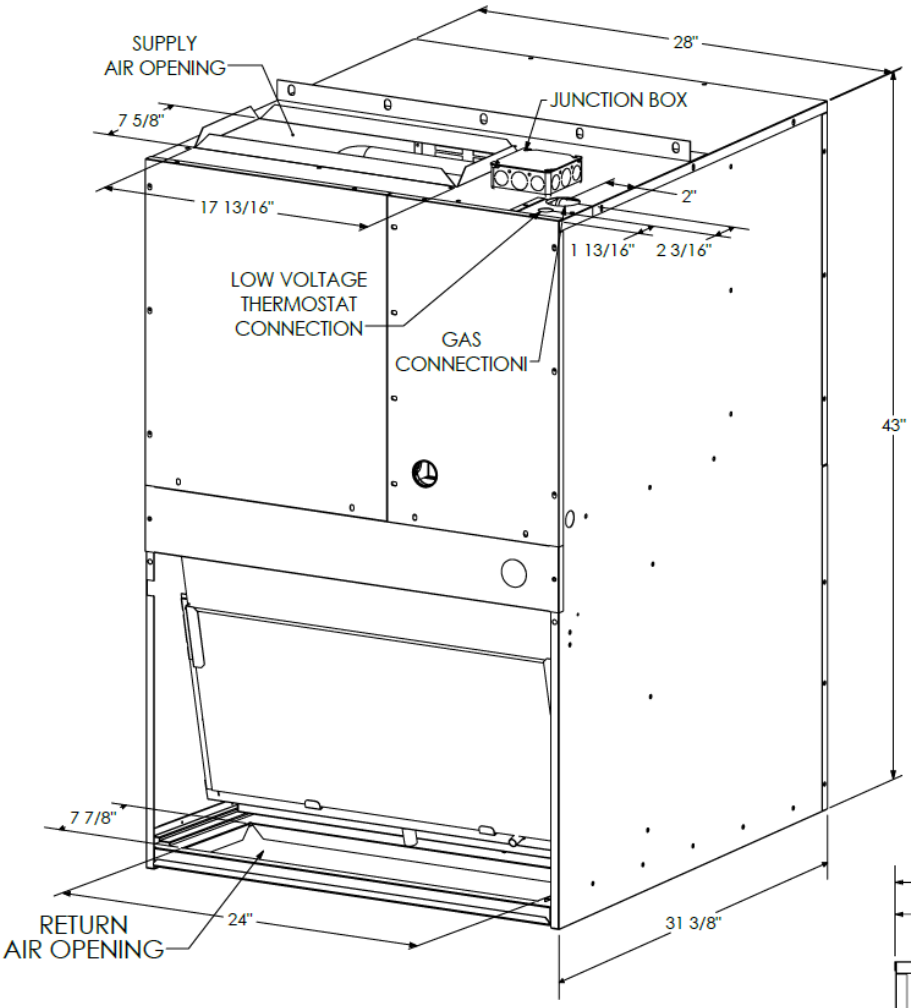

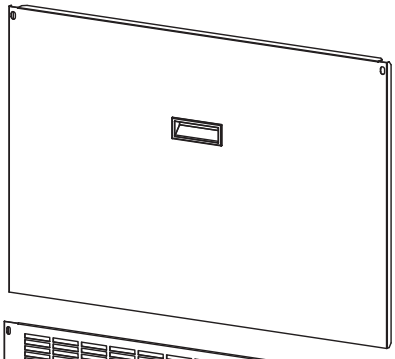

Standard Filter Door

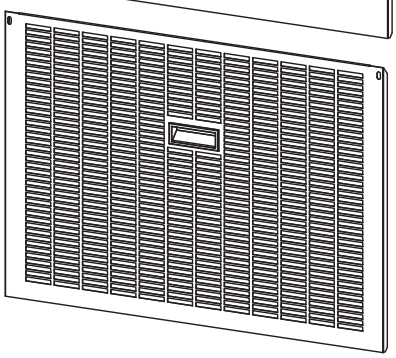

Option (B)
Slotted Filter Door
for Open Returns

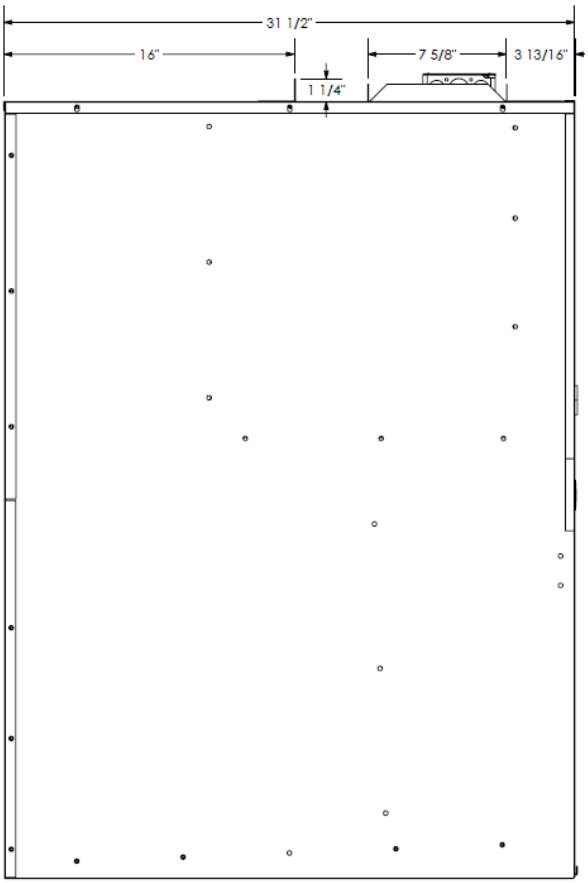

NOTE: Unit must be mounted a minimum of 8 inches above finished floor.
See installation guide for vent termination clearances

Gas Furnace Specifications

Gas Heat – The cabinet includes a gas furnace with integral flue duct, direct spark ignition, safety controls, and operating controls. The installation of the unit and gas piping must be in accordance with local codes.

Gas Valve Setting 3.5" W.C.

HEAT MODULE	CHS0025	CHS0032	CHS0043	CHS0050
INPUT BTUH (NG)	25,000	32,000	43,000	50,000
OUTPUT BTUH (NG)	23,750	30,400	40,850	47,500
INPUT BTUH (LP)	25,000	N/A	35,000	50,000
OUTPUT BTUH (LP)	23,750	N/A	33,250	47,500
MAXIMUM EXTERNAL STATIC PRESSURE	.4" W.C.	.4" W.C	.4" W.C	.4" W.C
INLET PRESSURE (NG)	7.0" W.C.	7.0" W.C.	7.0" W.C.	7.0" W.C.
MANIFOLD PRESSURE (NG)	3.5" W.C.	3.5" W.C.	3.5" W.C.	3.5" W.C.
INLET PRESSURE (LP)	11" W.C.	N/A	11" W.C	11" W.C
MANIFOLD PRESSURE (LP)	10" W.C.	N/A.	10" W.C	10" W.C
DISCHARGE TEMPERATURE RISE RANGE	30°F to 60°F	35°F to 65°F	35°F to 65°F	40°F to 70°F
BLOWER SPEED SETTING	Med. Low	Med. Low	Med. High	High
MODEL SIZE	25	32	43	50
ORIFICE SIZE N.G.	#51	#48	#50	#47
ORIFICE SIZE L.P.	#58	N/A	#60	#56
INDUCER ORIFICE SIZE	0.500	0.5625	0.62	0.81
ROLLOUT LIMIT SIZE (Manual Reset)	235°F	210°F	210°F	210°F
ROLLOUT LIMIT SIZE (Maximum Allowance)	260°F	235°F	235°F	235°F
Main Air Limit Size (Auto Reset)	165/-30°F	160/-30°F	140/-40°F	140/-40°F
Inducer Limit Size (Manual Reset)	160°F	160°F	160°F	160°F
Nominal Temperature Rise	45°F	50°F	50°F	55°F
Allowable Air Temperature Range	130-160	135-165	135-165	140-170
CO2% - Acceptable Range	6 to 7	6 to 7	6 to 7	6 to 7
CO Air Free - PPM	0-200	0-200	0-200	0-200
Collector Box Pressure Switch	-0.15+/-0.05	-0.3+/-0.05	-0.3+/-0.05	-0.6+/-0.05
Inducer Pressure Switch	-0.9+/-0.05	-0.9+/-0.05	-0.9+/-0.05	-0.7+/-0.05
Stack Temperature	80-140	80-140	80-140	80-140

Sequence of Operations (Gas Heat)

1. Call for Heat – The thermostat sends a call for heat therefore energizing the "white" wire to the control board. The control checks to see that the limit switch is closed and the pressure switch is open. If the limit switch is open, the control responds as defined in the "Limit Switch Operation - page 22". If the pressure switch is closed, the control will do four flashes on the green LED and wait indefinitely for the pressure switch to open. If the pressure switch is open, the control proceeds to **(2.) Pre-purge.**

2. Pre-purge – The control energizes the venter motor and waits for the pressure switch to close. If the pressure switch does not close within 240 seconds of the venter motor energizing, on 3 attempts, the control green LED will flash two times and will enter a soft lock out. When the pressure switch is proven closed, the control begins the pre-purge time. If flame is present any time while in pre-purge, the pre-purge time is restarted. If flame is present long enough to cause lockout, the control responds as defined in "Undesired Flame - page 22". The control runs the venter motor for a 30 second pre-purge time, then proceeds to the (**3.) Ignition Trial Period**.

3. Ignition Trial Period – The control energizes the spark and main gas valve. The venter remains energized. If flame is sensed during the first 10 seconds, the spark is de-energized and the control proceeds to **(4.) Heat Blower On Delay**. If flame has not been sensed during the first 10 seconds, the control de-energizes the spark output and keeps the gas valve energized for an additional one second flame proving period. If flame is not present after the flame proving period, the control de-energizes the gas valve and proceeds with ignition re-tries as specified in "Ignition Retry - page 18". If flame is present, the control proceeds to the **(4.) Heat Blower On Delay**

4. Heat Blower On Delay – The control waits for 20 seconds from the time the gas valve opened and then energizes the blower motor. The gas valve and venter motor remain energized. The control proceeds to **(5.) Steady Heat.**

5. Steady Heat – The control continuously monitors to the safeties (high limit, roll-out, and pressure) for open switches, flame sensor for proving, and the thermostat for a call for heat. When the thermostat call for heat is removed, the control de-energizes the gas valve and begins **(6.) Post-purge** and **(7.) Blower Off Delay**.

6. Post-purge – The venter motor output remains on for a 30-second post-purge period after the thermostat is satisfied.

7. Blower Off Delay – The blower motor is de-energized after a blower off delay 120 seconds factory setting (field adjustable, see page 15 or 39). Timing begins when the thermostat is satisfied.

Abnormal Functions

• **Interrupted Thermostat Call for Heat** – If the thermostat demand for heat is removed before the flame is recognized, the control will run the venter motor for the post purge period and de-energize all outputs. If the thermostat demand for heat is removed after successful ignition, the control will de-energize the gas valve, run the venter motor through post purge, and run the blower motor on heat speed for the selected delay off time.

• **Soft Lockout** – The control shall not initiate a call for heat or call for continuous fan while in lockout. The control will still respond to an open limit and undesired flame. Lockout shall automatically reset after one hour. Lockout may be manually reset by removing power from the control for more than one second or removing the thermostat call for heat for more than one and less than 20 seconds.

• **Hard Lockout** – If the control detects a fault on the control board, the status LED will be de-energized, and the control will lockout as long as the fault remains. A hard lockout will automatically reset if the hardware fault clears.

• **Power Interruption** – During a momentary power interruption or at voltage levels below the minimum operating voltage for line voltage the system will self-recover without lockout when voltage returns to the operating range. During a momentary power interruption of low voltage the board will enter a soft lockout. Power interruptions of less than 80ms shall not cause the control to change operating states. Power interruptions greater than 80ms may cause the control to interrupt the current operating cycle and re-start.

• **Ignition Retry** – If flame is not established on the first trial for ignition, the control de-energizes the gas valve and the venter motor remains energized for an inter-purge period of 30 seconds. The spark and gas valve are then re-energized, and the control initiates another trial for ignition. If flame is not established on the second trial for ignition, the control de-energizes the gas valve, energizes the blower motor on heat speed, and venter motor remains energized. The blower motor is shut off after 180 seconds. When the blower motor de-energizes, the spark and gas valve are re-energized and the control initiates another trial for ignition. (This blower delay is a self-healing feature for an open auxiliary limit switch). If flame is not established on the third trial for ignition, the control de-energizes the gas valve, and the venter motor remains energized for an inter-purge period of 20 seconds. The control then re-energizes the gas valve and spark and initiates another trial for ignition. If flame is not established on the fifth trial for ignition (initial try plus 4 re-tries), the control de-energizes the gas valve and goes into lockout. The control goes to one flash on the green LED to indicate ignition failure lockout.

• **Optional Condensate Freeze Protection** – If the burner compartment temperature falls to 41°F ± 9°F, the safety thermostat switch will close and energize the condensate heater. The heater will remain energized until the burner compartment reaches a temperature of 68°F ± 9°F. This heater will operate independently of the furnace's standard sequence of operation.

Installation Codes

These units must be installed in accordance with local building codes. In the absence of local codes, in the United States, the units should be installed in accordance with the National Fuel Gas Code (latest edition). A Canadian installation must be in accordance with the CAN/CGA-B149.1 and B149.2 Installation Code for Gas Burning Appliances and Equipment. These codes are available from CSA Information Services, 1-800-463-6727. Local authorities having jurisdiction should be considered before installation is made to verify local codes and installation procedure requirements.

High Altitude Operation

If the heater is being installed at an elevation above 2000 ft. (610m), the input rate will have to be derated. This is done by adjusting the valve outlet pressure (See page 23). Adjusting the valve outlet pressure is done after the heater is in operation; follow the instructions below. (see Figure 1).

Figure 1

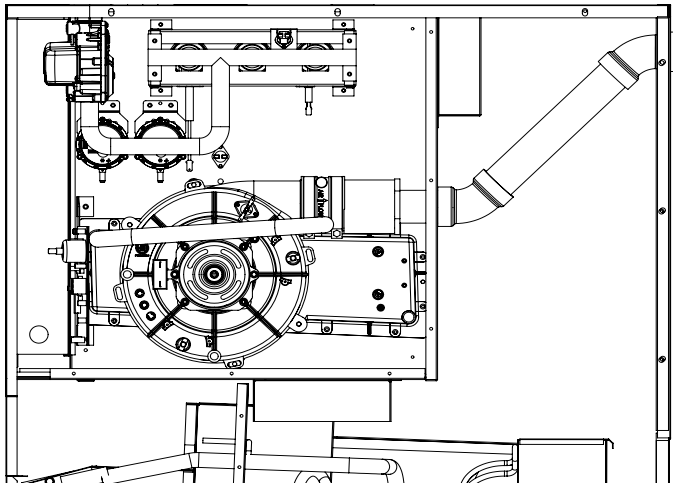

Heat Section Burner/Control Compartment

Note: Unit side panel is removed for clarity; side panel is not removable. Access to the burner/control compartment is through the small rear access panel.

Derating by Valve Outlet Pressure Adjustment for High Altitude Operation

1. Determine the required valve outlet pressure for the elevation where the heater will be operating. If unsure of the elevation, contact the local gas supplier.

METER TIME IN MINUTES AND SECONDS FOR NORMAL INPUT RATING OF FURNACES EQUIPPED FOR NATURAL OR LP GAS

INPUT BTU/ HR	METER SIZE CU. FT.	HEATING VALUE OF GAS BTU PER CU. FT.									
		900		1000		1040		1100		2500	
		MIN.	SEC.	MIN.	SEC.	MIN.	SEC.	MIN.	SEC.	MIN.	SEC.
50,000	ONE	1	5	1	12	1	15	1	18	3	20
	TEN	10	50	12	00	12	30	13	12	30	00
75,000	ONE	0	44	0	48	0	50	0	53	2	0
	TEN	7	12	8	0	8	19	8	48	20	0
100,000	ONE	0	33	0	36	0	38	0	40	1	30
	TEN	5	24	6	0	6	15	6	36	15	0
125,000	ONE	0	26	0	29	0	30	0	32	1	12
	TEN	4	19	4	48	5	0	5	17	12	0
150,000	ONE	0	31	0	24	0	25	0	26	1	0
	TEN	3	36	4	0	4	10	4	20	10	0

$$\text{Input BTU/HR} = \frac{\text{Heating Value of Gas (BTU/Ft}^3\text{) x 3600 x correction factor}}{\text{Time in Seconds (for 1 cu.ft.) of Gas}}$$

Note: This adjustment can only be done after the heater is in operation. It is included in the startup procedures.

2. With the manual valve positioned to prevent flow to the main burner, connect a manometer to the 1/8" pipe outlet pressure tap in the valve. Use a water column manometer that is readable to the nearest tenth of an inch.

3. Remove the cap from the pressure adjusting screw and adjust the valve outlet pressure to the pressure setting selected from the table. Cycle the main burner once or twice to properly seat the adjustment spring in the valve. Re-check the pressure. If necessary, re-adjust the pressure. When the pressure is correct, remove the manometer and replace the cap. Check for leaks at the pressure tap fitting.

4. With the heater operating determine that the inlet pressure to the heater for natural gas is between 4.5 and 10 inches w.c., and for propane between 11 and 14 inches w.c. Take this reading as close as possible to the heater (heaters are equipped with gas valves that have an inlet pressure tap.) If the inlet is not within the specified range, the inlet pressure must be corrected and Steps 3 and 4 repeated.

5. Find the Valve Outlet Pressure Adjustment label in the plastic bag that contained these instructions. Using a permanent marker, fill in the pressure setting. Adhere the label on the heater near the gas valve so that it is conspicuous to someone serving the valve.

NATURAL GAS - HIGH HEATING VALUE					MANIFOLD PRESSURE (GAS VALVE SETTING FOR NAT. GAS)
ALTITUDE ABOVE THE SEA LEVEL	FURNACE MODELS				
	CHS0025	CHS0032	CHS0043	CHS0050	
0 TO 1,999 FT	51	48	50	47	Factory Orifice Size
	3.5	3.5	3.5	3.5	Manifold Pressure
2,000 to 2,999 FT	51	48	49	47	Orifice Size
	3.2	3.2	3.2	3.2	Manifold Pressure
3,000 to 3,999 FT	51	48	49	47	Orifice Size
	3.0	3.0	3.0	3.0	Manifold Pressure
4,000 to 4,999 FT	51	48	49	47	Orifice Size
	2.8	2.8	2.8	2.8	Manifold Pressure
5,000 to 5,999 FT	51	48	49	47	Orifice Size
	2.5	2.5	2.5	2.5	Manifold Pressure
6,000 to 6,999 FT	53	50	50	49	Orifice Size
	3.5	3.5	3.0	3.1	Manifold Pressure
7,000 to 7,000 FT	53	50	50	49	Orifice Size
	3.3	3.2	2.9	3.0	Manifold Pressure
8,000 to 8,900 FT	53	51	50	49	Orifice Size
	3.0	3.5	3.0	3.0	Manifold Pressure
9,000 to 9,999 FT	53	51	50	49	Orifice Size
	2.9	3.2	2.9	2.9	Manifold Pressure
High Altitude Deration Chart for Natural Gas - High Heating Value					

NATURAL GAS - LOW HEATING VALUE					MANIFOLD PRESSURE (GAS VALVE SETTING FOR NAT. GAS)
ALTITUDE ABOVE THE SEA LEVEL	FURNACE MODELS				
	CHS0025	CHS0032	CHS0043	CHS0050	
0 TO 1,999 FT	51	48	50	47	Factory Orifice Size
	3.5	3.5	3.5	3.5	Manifold Pressure
2,000 to 2,999 FT	51	48	49	47	Orifice Size
	3.5	3.5	3.5	3.5	Manifold Pressure
3,000 to 3,999 FT	51	48	49	47	Orifice Size
	3.4	3.4	3.4	3.4	Manifold Pressure
4,000 to 4,999 FT	51	48	49	47	Orifice Size
	3.2	3.2	3.2	3.2	Manifold Pressure
5,000 to 5,999 FT	51	48	49	47	Orifice Size
	3.0	3.0	3.0	3.0	Manifold Pressure
6,000 to 6,999 FT	53	50	50	49	Orifice Size
	3.5	3.5	3.1	3.5	Manifold Pressure
7,000 to 7,000 FT	53	50	50	49	Orifice Size
	3.2	3.2	2.9	3.2	Manifold Pressure
8,000 to 8,900 FT	53	51	50	49	Orifice Size
	3.0	3.5	3.0	3.0	Manifold Pressure
9,000 to 9,999 FT	53	51	50	49	Orifice Size
	2.9	3.2	2.9	2.9	Manifold Pressure
High Altitude Deration Chart for Natural Gas - Low Heating Value					

PROPANE GAS					MANIFOLD PRESSURE (GAS VALVE SETTING FOR LP GAS)
ALTITUDE ABOVE THE SEA LEVEL	FURNACE MODELS				
	CHS0025	CHS0032	CHS0043	CHS0050	
0 to 1,999 FT	58	N/A	60	56	Conversion to LP Orifice Size
	10	10	10	10	Manifold Pressure
2,000 to 2,999 FT	58	N/A	60	56	Orifice Size
	9.2	9.2	9.2	9.2	Manifold Pressure
3,000 to 3,999 FT	58	N/A	60	56	Orifice Size
	8.7	8.7	8.7	8.7	Manifold Pressure
4,000 to 4,999 FT	58	N/A	60	56	Orifice Size
	8.5	8.5	8.5	8.5	Manifold Pressure
5,000 to 5,999 FT	60	N/A	61	58	Orifice Size
	9.6	9.6	9.6	9.6	Manifold Pressure
6,000 to 6,999 FT	60	N/A	61	58	Orifice Size
	9.2	9.2	9.2	9.2	Manifold Pressure
7,000 to 7,999 FT	60	N/A	61	58	Orifice Size
	8.8	8.8	8.8	8.8	Manifold Pressure
8,000 to 8,999 FT	60	N/A	61	58	Orifice Size
	8.5	8.5	8.5	8.5	Manifold Pressure
9,000 to 9,999 FT	60	N/A	61	58	Orifice Size
	8.5	8.5	8.5	8.5	Manifold Pressure
High Altitude Deration Chart for Natural Gas - High Heating Value					

ALTITUDE ABOVE SEA LEVEL	LOCAL HEATING VALUE, BTU PER CUBIC FOOT								
	650	700	750	800	850	900	950	1,000	1,050
2,000 FT	LOW	LOW	LOW	LOW	LOW	LOW	HIGH	HIGH	HIGH
3,000 FT	LOW	LOW	LOW	LOW	LOW	LOW	HIGH	HIGH	HIGH
4,000 FT	LOW	LOW	LOW	LOW	LOW	HIGH	HIGH	HIGH	HIGH
5,000 FT	LOW	LOW	LOW	LOW	LOW	HIGH	HIGH	HIGH	HIGH
6,000 FT	LOW	LOW	LOW	LOW	HIGH	HIGH	HIGH	HIGH	HIGH
7,000 FT	LOW	LOW	LOW	LOW	HIGH	HIGH	HIGH	HIGH	HIGH
8,000 FT	LOW	LOW	LOW	HIGH	HIGH	HIGH	HIGH	HIGH	HIGH
9,000 FT	LOW	LOW	LOW	HIGH	HIGH	HIGH	HIGH	HIGH	HIGH
10,000 FT	LOW	LOW	HIGH	HIGH	HIGH	HIGH	HIGH	HIGH	HIGH
Heating values for Natural Gas									

Clearances

Clearance to combustibles is defined as the minimum distance from a heater to a surface or object that is necessary to ensure that a surface temperature of 90°F above the surrounding ambient temperature is not exceeded. Minimum clearance to combustibles from all sides of this properly installed unit is zero inches. Adequate clearances must be provided to allow installation of the union and shutoff valve, as well as accessibility to wiring and control compartments. If this unit is installed in an attic or other insulated space, it must be kept free and clear of insulating material. The area must be inspected when the unit is installed or insulation is added. Some insulating materials may be combustible. (See page 12 for other clearances)

Venting

The venting system is an integral part of the heater as shipped to you. Do not modify or add to the vent system. The heat section includes an exhaust blower. The blower draws the combustion products out of the heat exchanger, mixes combustion products with dilution air and forces the mixture to the outside. A chimney is not required. No special provisions are required for supplying air for combustion. Do not alter or extend the vent outlet. The venting system is designed for proper operation under all weather conditions and for winds up to 40 mph. (See page 12 for locating vent)

Gas Piping and Pressures

⚠ WARNING

This heater is equipped for a maximum gas supply pressure of 1/2 pound, 8 ounces or 14 inches water column. Supply pressure higher than 1/2 pound requires installation of an additional lockup-type service regulator external to the unit.

⚠ AVERTISSEMENT

Cet appareil de chauffage est équipé pour une pression d'alimentation maximale en gaz de 1/2 livre, 8 onces ou 14 pouces colonne d'eau. Une pression d'alimentation supérieure à 1/2 livre nécessite l'installation d'un régulateur de service de verrouillage supplémentaire à l'extérieur de l'unité.

Gas piping external to the unit must include: a manual shutoff valve with 1/8" NPT plugged tapping (for test gauge connection), drip leg and ground union fitting.

If the supply air from the unit is ducted to space(s) outside the space containing the unit, the return air must be ducted from outside the space containing the unit and sealed to the unit cabinet return air opening.

Pressure Testing Supply Piping

Test Pressures Above 1/2 PSI: Disconnect the heat manual valve from the gas supply line that is to be tested. Cap or plug the supply line.

Test Pressures Below 1/2 PSI: Before testing, close the manual valve on the heater.

All piping must be in accordance with requirements outlined in the National Fuel Gas Code ANSI/Z223,1a (latest edition) or CAN/ CGA-B149.1 and B149.2. Gas supply piping installation should conform with good practice and the local codes. Support gas piping with pipe hangers, metal strapping or other suitable material; do not rely on the heater to support the gas pipe.

CAPACITY OF PIPING

Cubic Feet Per hour Based on 0.3" w.c. Pressure Drop
Specific Gravity for Natural Gas - 0.6 (Natural Gas - 1000 BTU/Cubic Feet)
Specific Gravity for Propane Gas - 1.6 (Propane Gas - 2550 BTU/Cubic Feet)

LENGTH OF PIPE	DIAMETER OF PIPE											
	1/2"		3/4"		1"		1 1/4"		1 1/2"		2"	
	NATURAL	PROPANE	NATURAL	PROPANE	NATURAL	PROPANE	NATURAL	PROPANE	NATURAL	PROPANE	NATURAL	PROPANE
20'	92	107	190	116	350	214	730	445	1100	671	2100	1281
30'	73	45	152	93	285	174	590	360	890	543	1650	1007
40'	63	38	130	79	245	149	500	305	760	464	1450	885
50'	56	34	115	70	215	131	440	268	670	409	1270	775
60'	50	31	105	64	195	119	400	244	610	372	1105	674
70'	46	28	96	59	180	110	370	226	560	342	1050	641
80'	43	26	90	55	170	104	350	214	530	323	990	604
90'	40	24	84	51	160	98	320	195	490	299	930	567
100'	38	23	79	48	150	92	305	186	460	281	870	531
125'	34	21	72	44	130	79	275	168	410	250	780	476
150'	31	19	64	39	120	73	250	153	380	232	710	433
160'	28	17	59	36	110	67	225	137	350	214	650	397
170'	26	16	55	34	100	61	210	128	320	195	610	372

Note: When sizing lines, consider possibilities of future expansion and increased requirements. Refer to National Fuel Gas Code for additional information on line sizing.

The heater is orificed for operation with natural gas having a heating value of 1000 (+/-50) BTU/H per cubic feet or propane gas with a heating valve of 2500 (+/-100) BTU/H per cubic feet. If the gas at the installation does not meet these specifications, consult the factory for proper orificing. **Pipe joint compounds (pipe dope) shall be resistant to the action of liquefied petroleum gas or any other chemical constituents of the gas being supplied.**

Install a ground joint union and manual shut off valve upstream of the unit control system, as shown in Figure 2. The 1/8" plugged tapping in the shut off valve provides connection for a supply line pressure test gauge. The National Fuel Gas Code requires the installation of a trap with a minimum 3" drip leg. Local codes may require a minimum drip leg longer than 3" (typically 6"). Gas connection is 1/2". Leak-test all connections by brushing on a leak-detecting solution.

⚠ WARNING

All components of a gas supply system must be leak tested prior to placing equipment in service. Never test for leaks with an open flame. Failure to comply could result in Personal injury, property damage or death.

⚠ AVERTISSEMENT

Tous les composants d'un système d'alimentation en gaz doivent faire l'objet d'essais d'étanchéité avant la mise en service de l'équipement. Ne testez jamais les fuites avec une flamme nue. Le défaut de se conformer pourrait entraîner des blessures corporelles, des dommages matériels ou la mort.

Gas Connection and View

Figure 2

Access Panels and Heat Exchanger Inspection Panel

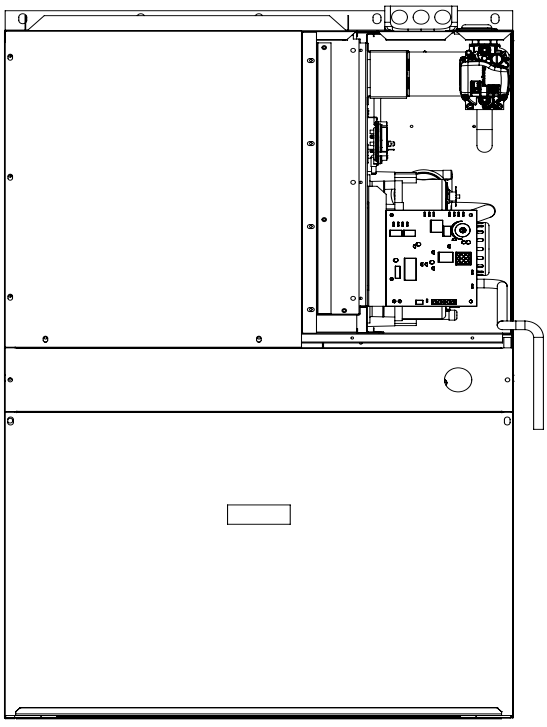

Note: Install the heat exchanger inspection panel in the ductwork in such a manner that will prevent air leaks.

Valve Outlet Gas Pressure Setting

Measuring valve outlet gas pressure cannot be done until the heater is in operation. Normally adjustments should not be necessary to the factory preset regulator (also, see paragraph on high altitude operation). If adjustment is necessary, the following warnings and instructions apply.

⚠ WARNING

Valve outlet gas pressure must never exceed 3.5" w.c. For natural gas and 10" W. C. for propane gas.

⚠ AVERTISSEMENT

La pression de gaz de sortie de soupape ne doit jamais dépasser 3.5" W.c. Pour le gaz naturel et 10" w.c. Pour le gaz propane.

For Natural Gas: When the heater leaves the factory, the combination gas valve is set so that the valve outlet gas pressure is regulated to 3.5" w.c. Inlet supply pressure to the valve for natural gas must be a minimum of 4.5" w.c. and a maximum of 10" w.c. Normally, field adjustment should not be required.

For Propane Gas: When the heater leaves the factory, the combination gas valve is set so that the valve outlet gas pressure is regulated to 10" w.c. Inlet supply pressure to the valve for propane gas must be a minimum of 11" w.c. and a maximum of 14" w.c. Normally, field adjustment should not be required.

Before attempting to measure or adjust valve outlet gas pressure, the inlet supply pressure **must** be within the specified range both when the heater is in operation and on standby.

Incorrect inlet pressure could cause excessive valve outlet gas pressure immediately or at some future time. If natural gas supply pressure is too high, install a regulator in the supply line before it reaches the heater. If natural gas supply pressure is too low, contact your gas supplier.

Instructions on How to Check Valve Outlet Pressure

(Can only be done after heater is installed):

1. With the manual valve positioned to prevent flow to the main burner, connect a manometer to the 1/8" pipe outlet pressure tap in the valve. NOTE: A manometer (fluid-field gauge) is recommended rather than a spring type gauge due to the difficulty of maintaining calibration of a spring type gauge.

2. Open the valve and operate the heater. Measure the gas pressure at the outlet of the automatic gas valve. Normally adjustments should not be necessary to the factory-preset regulator. If adjustment is necessary, set pressure to correct settings by turning the regulator screw IN (clockwise) to increase pressure. Turn regulator screws OUT (counterclockwise) to decrease pressure. (See Figure 3 on page 25)

⚠ CAUTION

Route the wires so that they do not contact the flue gas collection box or venter housing. Consult the wiring diagram supplied with your heater.

If any of the original wires as supplied with the appliance must be replaced, it must be replaced with wiring material having a temperature rating of at least 105°C, except for limit control, flame rollout switch and sensor lead wires, which must be 150°C. Please see **"Hazard Intensity Levels"**.

⚠ PRUDENCE

Acheminez les fils de manière à ce qu'ils n'entrent pas en contact avec la boîte de collecte des gaz de combustion ou le boîtier du venter. Consultez le schéma de câblage fourni avec votre appareil de chauffage.

Si l'un des fils d'origine fournis avec l'appareil doit être remplacé, il doit être remplacé par un matériau de câblage ayant une température nominale d'au moins 105°C, à l'exception du contrôle de la limite, de l'interrupteur de déploiement de la flamme et des fils de plomb du capteur, qui doivent être de 150°C. Veuillez consulter la section **"Niveaux d'intensité du Danger"**.

Ignition System

This heater is equipped with a direct spark integrated control system. The system monitors the safety devices and controls the operation of the blower and venter motors and the gas valve between heat cycles. It also controls the blower for cooling.

Ignition System Operating Sequence

On a call for heat from the thermostat, the system energizes the venter motor and goes through a 30-second prepurge. The system verifies that the pressure switch, the high limit and the flame rollout switch are in the closed state. The gas valve is then energized and the ignition system provides the high voltage spark to the electrode to ignite the main burner gas. Burner flame is electronically sensed by the control upon carry over of flame. (A separate solid metal probe is used as the flame sensing function. A low voltage electrical signal is imposed on the metal probe that is electrically isolated from ground. When the flame impinges on the flame sensing probe, the flame acts as a conduction path to ground. The flame rectifies and completes the DC circuit and the ignition system acknowledges the flame.) The fan motor is energized by the system after 20 seconds of flame sensing.

After the thermostat has been satisfied, the system de-energizes the gas valve, the venter motor goes through a 30-second post-purge and the fan motor remains energized for an additional time.

Undesired Flame – If flame is sensed while the gas valve is de-energized, the control shall energize the venter motor and blower motor on heat speed. When flame is no longer sensed, the venter motor will run through post-purge, and the blower motor will run through the selected heat blower off delay time. The control will do a soft lockout, but will still respond to open limit and flame. The FLAME (yellow) LED shall flash rapidly when lockout is due to undesired flame.

Note: This is a fire trial system. Should the unit not sense burner flame, two additional tries will be made. If the unit does not sense flame in three tries, it will lockout for one hour before initiating another 3-sequence trial for ignition. To initiate another trial for ignition before the one hour elapses requires that either the thermostat be reset or the power to the unit be interrupted for 30 seconds. The user should not continue to try resetting the system. Contact a qualified service agency.

Combustion Air Proving Switches

The combustion air proving switches are pressure sensitive switches that monitor air pressure to ensure that proper combustion air flow is available. The switches are single pole/normally open devices that close when a decreasing pressure is sensed in the venter housing, or condensate collection box.

On start-up when the heater is cold, the sensing pressure is at the most negative level, and as the heater warms up, the sensing pressure becomes less negative. After the system has reached equilibrium (about 10 minutes), the sensing pressure levels off.

If a restriction causes the sensing pressure to be outside the switch setpoint, the pressure switch will function to shut off the main burner. The main burner will remain off until the system has cooled and/or the resistance is reduced. The Table below lists the approximate water column negative pressure readings and switch setpoints for sea level operating conditions.

Heat Module		CHS0025	CHS0032	CHS0043	CHS0050
Collector Box Pressure Switch	OPENS	-0.15+/-0.05	-0.3+/-0.05	-0.3+/-0.05	-0.6+/-0.05
	CLOSES	-0.30 Max	-0.45 Max	-0.45 Max	-0.75 Max
Inducer Pressure Switch	OPENS	-0.9+/-0.05	-0.9+/-0.05	-0.9+/-0.05	-0.7+/-0.05
	CLOSES	-1.05 Max	-1.05 Max	-1.05 Max	-0.85 Max

Limit Switches

All units are equipped with a temperature activated auto reset limit control. The control is factory set and is non-adjustable. If the setpoint is reached, the limit control acts to interrupt the electric supply to the gas valve. These safety devices provide protection in the case of motor failure or lack of airflow due to a restriction at the inlet or outlet. **Limit Switch Operation** – The limit switches are ignored unless a call for heat is present (W energized). If the limit switch is openw and a call for heat is present, the control de-energizes the gas valve and turns the blower motor on heat speed and runs the venter motor. The control will be in soft lockout and flashing fault code "3" before returning to normal operation. When the switch re-closes or the call for heat is lost, the control runs the venter motor through post purge and runs the blower motor through the selected fan off delay.

Flame Rollout Switch

All units are equipped with a temperature activated manually reset switch. The flame rollout switch is centered above the burner assembly. It is factory set and is non-adjustable. If the setpoint is reached, the flame rollout acts to interrupt the electric supply to the gas valve. If the flame rollout switch activates, identify and correct the cause before resetting the switch. Refer to the Maintenance Section for information on probable causes and instructions on resetting the flame rollout switch.

Burner

The heater has a burner designed to provide controlled flame stability without lifting or flashback with either natural or propane gas. The burner can be removed as a unit for inspection or service.

Gas Valve

⚠ WARNING

The operating valve is the prime safety shutoff. All gas supply lines must be free of dirt or scale before connecting the unit to ensure positive closure. See Hazard Intensity Levels, page 5.

⚠ AVERTISSEMENT

La vanne de fonctionnement est le principal arrêt de sécurité. Toutes les conduites d'alimentation en gaz doivent être exemptes de saleté ou de balancement avant de connecter l'unité pour assurer une fermeture positive. Voir Les Niveaux d'Intensité des Dangers, page 5.

Start Up

Check Installation - Check the installation prior to start-up:

1. Unit must be secure and level.
2. Verify proper clearances from combustibles.
3. Check vent and combustion air systems to be sure that they are not blocked.
4. Check piping for leaks and proper gas line pressure. Bleed gas lines of trapped air.
5. Check electrical wiring. Be sure all wire gauges are as recommended. A service disconnect switch should be used. Verify that fusing or circuit breakers are adequate for the load use.
6. Verify that the return air duct connection is physically sound, sealed to the unit cabinet and terminates outside of the space containing the furnace.
7. Check that the vent connector is in place and is physically sound without holes or excessive corrosion.
8. Check that flue product carrying areas external to the furnace are clear and free of obstructions.
9. Check that there are no obvious signs of deterioration of the furnace.
10. Check that the physical support of the unit and furnace are sound without sagging, cracks, gaps, etc., around the base so as to provide a seal between the support and the base

These examinations should be done by qualified service personnel prior to initial start-up, and then at least on a yearly basis.

Heater Start-Up

SAFETY WARNINGS

WARNINGS: FOR YOUR SAFETY, READ BEFORE OPERATING. IF YOU DO NOT FOLLOW THESE INSTRUCTIONS EXACTLY, A FIRE OR EXPLOSION MAY RESULT CAUSING PROPERTY DAMAGE, PERSONAL INJURY OR LOSS OF LIFE.

- This appliance does not have a pilot. It is equipped with an ignition device that automatically lights the burner. Do not try to light the burner by hand.
- Before operating, smell all around the appliance area for gas. Be sure to smell next to the floor because some gas is heavier than air and will settle on the floor.

WHAT TO DO IF YOU SMELL GAS.

- Do not try to light any appliance.
- Do not touch any electrical switch; do not use any phone in your building.
- Immediately call your gas supplier from a neighbor's phone. Follow the gas supplier's instructions..
- If you cannot reach your gas supplier, call the fire department
- Use only your hand to turn the gas control ON/OFF knob on the gas valve. Never use tools. If the valve ON/OFF knob will not turn by hand, do not try to repair it. Call a qualified service technician. Force or attempted repair may result in a fire or explosion.
- Should overheating occur, or the gas supply fail to shut off, turn off the manual gas valve to the appliance before shutting of the electrical supply.
- Do not use this appliance if any part has been under water. Immediately call a qualified service technician to inspect the appliance and to replace any part of the control system and any gas control that has been under water.

Operating Instructions and Operating Sequence

1. Set thermostat at lowest setting.
2. Turn off all electric power to the appliance.
3. This appliance is equipped with an ignition device that automatically lights the burner. Do not try to light the burner by hand. Open the access door and locate the gas control (ON/OFF) switch on the gas valve.
4. Turn the gas control switch clockwise to "OFF."
5. Wait five (5) minutes to clear for any gas. Then smell for gas, including near the floor. If you smell gas, STOP! and follow the steps in the WARNINGS above or on the Operating Label on the heater. If you do not smell gas, proceed to the next step.
6. Turn the gas control switch counterclockwise to "ON." Close the access door.
7. Turn on the electric power to the heater.
8. Set the thermostat to the desired setting.
   - Thermostat calls for heat, energizes venter motor.
   - Venter pressure switch closes, firing the unit.
   - Burner flame is sensed and in 30 seconds, the fan motor is energized.
   - If the flame is extinguished during the main burner operation, the integrated control system closed the main valve and must be reset by interrupting power to the control circuit (see lighting instructions on the heater).

Note: If the appliance does not operate, follow the instructions "To Turn Off Gas to Appliance" (below) and call your service technician.

To Turn Off Gas To The Appliance

1. Set thermostat to lowest setting.
2. If service is to be performed, turn off all electrical power to the appliance.
3. Open the access door.
4. Turn the gas control knob clockwise to "OFF." Do not force.
5. Close the access door.

Check Installation After Start-Up

- ☐ If the heater is being derated for high altitude operation, follow the instructions to adjust the valve outlet pressure. Be sure to complete the "change pressure" tag and adhere it to the heater close to the gas valve.
- ☐ If unit is not being derated, measure to verify valve outlet gas pressure.
- ☐ Inspect the venting system. Determine that there is no blockage or restriction or leakage.
- ☐ Turn the unit off and on, pausing two minutes between each cycle. Observe for smooth ignition.

Special Notes for Extremely Cold Weather Areas (below - 20°F/-29°C)

In areas where extremely cold outdoor temperatures can be expected, some additional installation and operating precautions should be taken to prevent possible vent system ice blockage that could result in safety shutdown of the burners:

1. Adjust to the highest achievable temperature rise within the rise and static pressure ranges specified on the rating plate.
2. Make sure there are no leaks of outside air into the return air system.
3. Keep the outside louver grill as free as possible of any ice that may form and obstruct the flue outlet.
4. In extreme cold weather with high speed wind, additional field installed protection may be required. This optional kit P# CPFP-K1 can be ordered and installed in the field.

⚠ DANGER

The gas burner in this gas-fired equipment is designed and equipped to provide safe and complete combustion. However, if the installation does not permit the burner to receive the proper supply of combustion air, complete combustion may not occur. The result is incomplete combustion that produces carbon monoxide, a poisonous gas that can cause death. Safe operation of direct-fired gas burning equipment requires a properly operating vent system that vents all flue products to the outside atmosphere. Failure to provide venting will result in a health hazard which could cause serious personal injury or death. Always comply with the combustion air requirements in the installation codes. Combustion air at the burner should be regulated only by manufacturer-provided equipment. Never restrict or otherwise alter the supply of combustion air to any heater.

⚠ DANGER

Le brûleur à gaz de cet équipement au gaz est conçu et équipé pour assurer une combustion sûre et complète. Toutefois, si l'installation ne permet pas au brûleur de recevoir l'approvisionnement approprié en air de combustion, une combustion complète peut ne pas se produire. Il en résulte une combustion incomplète qui produit du monoxyde de carbone, un gaz toxique qui peut causer la mort. L'utilisation sécuritaire de l'équipement de combustion directe au gaz nécessite un système d'évent fonctionnant correctement qui évacue tous les produits de combustion à l'atmosphère extérieure. Le défaut de fournir une ventilation entraînera un danger pour la santé qui pourrait causer des blessures graves ou la mort. Toujours se conformer aux exigences en matière d'air de combustion dans les codes d'installation. L'air de combustion au brûleur ne devrait être régulé que par l'équipement fourni par le fabricant. Ne jamais restreindre ou modifier autrement l'apport d'air de combustion à un appareil de chauffage.

Figure 3: Gas Control

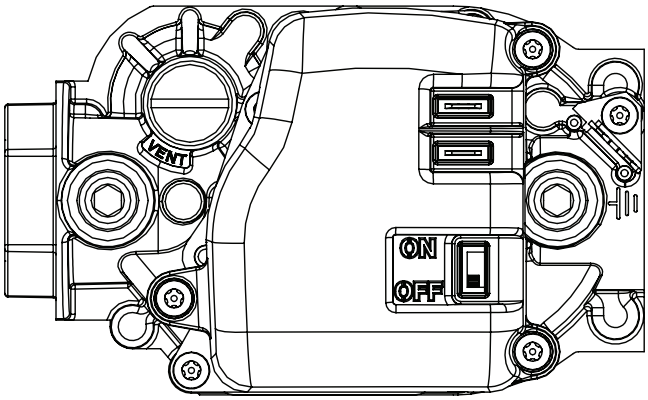

Maintenance and Service

At all times, NCP maintenance and service guidelines shall be followed. If in doubt, consult NCP's technical department for assistance.

The following safety checks must be performed prior to conducting work on the system to minimize the risk of ignition of the refrigerant:

1. Work shall be undertaken under a controlled procedure so as to minimize the risk of a flammable gas or vapor being present while the work is being performed.

2. All maintenance staff and others working in the local area shall be instructed on the nature of work being carried out. Work in confined spaces shall be avoided.

3. The area shall be checked with an appropriate refrigerant detector prior to and during work, to ensure the technician is aware of potentially toxic or flammable atmospheres. Ensure that the leak detection equipment being used is suitable for use with all applicable refrigerants, i.e. non-sparking, adequately sealed or intrinsically safe.

4. If any hot work is to be conducted on the refrigerating equipment or any associated parts, appropriate fire extinguishing equipment shall be available to hand. Have a dry powder or CO2 fire extinguisher adjacent to the charging area.

5. No person carrying out work in relation to a REFRIGERATING SYSTEM which involves exposing any pipe work shall use any sources of ignition in such a manner that it may lead to the risk of fire or explosion. All possible ignition sources, including cigarette smoking, should be kept sufficiently far away from the site of installation, repairing, removing and disposal, during which refrigerant can possibly be released to the surrounding space. Prior to work taking place, the area around the equipment is to be surveyed to make sure that there are no flammable hazards or ignition risks. “No Smoking” signs shall be displayed.

6. Ensure that the area is in the open or that it is adequately ventilated before breaking into the system or conducting any hot work. A degree of ventilation shall continue during the period that the work is carried out. The ventilation should safely disperse any released refrigerant and preferably expel it externally into the atmosphere.

7. The following safety checks must be performed prior to conducting work on the refrigerating equipment

a. The actual REFRIGERANT CHARGE is in accordance with the room size within which the refrigerant containing parts are installed.
b. The ventilation machinery and outlets are operating adequately and are not obstructed.
c. Marking to the equipment continues to be visible and legible. Markings and signs that are illegible shall be corrected or replaced.
d. Refrigerating pipe or components are installed in a position where they are unlikely to be exposed to any substance which may corrode refrigerant containing components, unless the components are constructed of materials which are inherently resistant to being corroded or are suitably protected against being so corroded.

8. The following safety checks must be performed prior to conducting electrical work on the system to minimize the risk of ignition and electrocution.

a. Capacitors are discharged: this shall be done in a safe manner to avoid possibility of sparking.
b. No live electrical components and wiring are exposed while charging, recovering or purging the system.
c. Ensure there is continuity of earth bonding.

9. Sealed electrical components shall be replaced.

10. Intrinsically safe components must be replaced.

The 16" x 25" x 1" filter on the cooling chassis must be maintained regularly to assure that the unit provides optimal performance and energy efficiency. The intervals between replacing depends entirely on the cleanliness of the return air to the unit and the time that the indoor blower operates. The air filter is accessible by removing the lower access panel. The filter should be inspected and replaced as needed and is not washable. Substituting the air filter with media other than the type provided with the unit is not recommended, since other materials may cause additional static pressure, which could reduce the air delivery of the unit. **The unit should never be operated without the air filter and access panels in place**.

Cooling Chassis

The cooling chassis contains all items related to the cooling functions of the unit, and also contains the indoor blower and motor for the heating function. For extensive servicing, qualified personnel may choose to remove the cooling chassis from the unit and take it to a work area. Spare chassis are recommended so that extensive servicing can be performed outside the living space. This will prevent introducing dirt or doing damage in the living area, and could help to eliminate significant disruption of the air conditioning and heating functions in the living areas.

The indoor blower motor and the outdoor fan motor have permanently lubricated bearings and do not require routine service. The refrigeration system is sealed and factory charged with R454B so that routine maintenance is not required. The electrical controls do not require routine service. Cleaning of the outdoor coil, indoor coil, drain pan, and inside the bottom of the chassis are recommended at least once a year, and more often if the equipment is operated in a dusty or hostile environment. The outdoor coil is an aluminum microchannel condensing coil with an anti-corrosion coating that requires specific precaution when cleaning. It is recommended to rinse the coil using a low pressure hose (less than 70 psi) to prevent buildup of dirt and debris. Rinse from the outside of the coil in, making sure to protect the condenser motor from water damage during the

cleaning process. Leaves, twigs, and other large debris should be removed with a soft, non-metallic bristle brush prior to rinsing of the coil to prevent debris from being forced between the fins. Care should be taken not to use the brush horizontally across the fins as they are easily damaged.
DO NOT USE CHEMICALS, HOUSEHOLD BLEACH, OR ACID CLEANERS AS THEY WILL ACCELERATE CORROSION ON THE COIL. AVOID USING PRESSURE WASHERS, HIGH PRESSURE HOSES, OR HIGHLY COMPRESSED AIR TO CLEAN THE COIL. DOING SO CAN PERMANENTLY DAMAGE THE COIL, REDUCE UNIT PERFORMANCE, AND VOID THE WARRANTY.

Power to the unit should always be turned off before performing service or removing the cooling chassis from the unit. One power connector and one control circuit connector are provided for easy disconnecting and re-connecting of the wires between the cooling chassis and cabinet. **After reinstalling the cooling chassis, the indoor blower cover plate and controls enclosure cover must be reinstalled**.

If chassis needs replacement, the chassis must be decommissioned properly. When removing refrigerant from a system, it is recommended good practice that all refrigerants are removed safely. The following steps shall be adhered to properly decommission chassis.

1. Become familiar with the equipment and its operation.

2. Isolate system electrically.

3. Before attempting the procedure, ensure that:

a. Mechanical handling equipment is available, if required, for handling refrigerant cylinders;
b. All personal protective equipment is available and being used correctly;
c. The recovery process is supervised at all times by a competent person;
d. Recovery equipment and cylinders conform to the appropriate standards.

Note: When transferring refrigerant into cylinders, ensure that only appropriate refrigerant recovery cylinders are employed. Recovery equipment shall be in good working order with a set of instructions concerning the equipment that is at hand and shall be suitable for the recovery of the flammable refrigerant. Ensure that the correct number of cylinders for holding the total system charge is available. All cylinders to be used are designated for the recovered refrigerant and labelled for that refrigerant (i.e. special cylinders for the recovery of refrigerant). Cylinders shall be complete with pressure-relief valve and associated shut-off valves in good working order. Empty recovery cylinders are evacuated and, if possible, cooled before recovery occurs. In addition, a set of calibrated weighing scales shall be available and in good working order. Hoses shall be complete with leak-free disconnect couplings and in good condition.

4. Pump down refrigerant system.

5. Make sure that cylinder is situated on the scales before recovery takes place.

6. Start the recovery machine and operate in accordance with instructions and

7. Do not overfill cylinders (no more than 80% volume liquid charge).

8. Do not exceed the maximum working pressure of the cylinder, even temporarily.

9. When the cylinders have been filled correctly and the process completed, make sure that the cylinders and the equipment are removed from site promptly and all isolation valves on the equipment are closed off.

10. Recovered refrigerant shall not be charged into another REFRIGERATING SYSTEM unless it has been cleaned and checked. Recovered refrigerant shall be processed according to local legislation in the correct recovery cylinder, and the relevant waste transfer note arranged. Do not mix refrigerants in recovery units and especially not in cylinders.

11. Equipment shall be labelled stating that it has been de-commissioned and emptied of refrigerant. The label shall be dated and signed. Label shall state the equipment contains FLAMMABLE REFRIGERANT.

12. If compressors or compressor oils are to be removed, ensure that they have been evacuated to an acceptable level to make certain that flammable refrigerant does not remain within the lubricant. The compressor body shall not be heated by an open flame or other ignition sources to accelerate this process. When oil is drained from a system, it shall be carried out safely.

⚠ WARNING

IF YOU TURN OFF POWER SUPPLY, TURN OFF THE GAS. SEE HAZARD LEVELS, PAGE 5. The material contained in the **MAINTENANCE AND SERVICE** section of this manual is designed to aid a qualified service person in maintaining and servicing this equipment. This unit will operate with minimum maintenance. To ensure long life and satisfactory performance, a heater that is operated under normal conditions should be inspected and cleaned at the start of each heating season. If the heater is operating in an area where an unusual amount of dust, soot or other impurities are present in the air, more frequent maintenance is recommended. When any service is complete, be careful to reassemble correctly to ensure that no unsafe conditions are created. When re-lighting, always follow the lighting instructions on the heater.

⚠ AVERTISSEMENT

SI VOUS ÉTEIGNEZ L'ALIMENTATION ÉLECTRIQUE, ÉTEIGNEZ LE GAZ. VOIR NIVEAUX DE DANGER, PAGE 5. Le matériel contenu dans la section entretien et entretien du présent manuel est conçu pour aider une personne de service qualifiée à entretenir et à entretenir cet équipement. Cette unité fonctionnera avec un minimum d'entretien. Pour assurer une longue durée de vie et un rendement satisfaisant, un appareil de chauffage qui fonctionne dans des conditions normales devrait être inspecté et nettoyé au début de chaque saison de chauffage. Si le chauffage fonctionne dans une zone où une quantité inhabituelle de poussière, de suie ou d'autres impuretés est présente dans l'air, un entretien plus fréquent est recommandé. Lorsqu'un service est terminé, veillez à le remonter correctement pour vous assurer qu'aucune condition dangereuse n'est créée. Lors du ré-éclairage, suivez toujours les instructions d'éclairage sur le chauffage.

Maintenance Schedule

At least every six weeks check the filter. Clean or replace as necessary. A clean filter in addition to providing a comfortable environment ensures fuel-efficient operation and long heat exchanger life. Do the following procedures at least annually.

- Clean all dirt, lint, and grease from the combustion air openings and venter motor.
- Inspect the heat exchanger. Clean if needed.
- Check the burner for scale, dust, or lint accumulation. Clean if needed.
- Check the vent system for soundness. Replace any parts that do not appear sound.
- Inspect wires are not subject to wear, corrosion, excessive pressure, vibration, sharp edges or any other adverse environmental effects. Take into account the effects of aging or continual vibration from sources such as compressors or fans. Replace damaged wiring.

Note: Use only factory-authorized replacement parts.

Burner/Control Compartment

Heat Section Burner/Control Compartment

Showing Locations of Burner Assembly and Controls

Note: Unit side panel is removed for clarity; side panel is not removable. Access to the burner/control compartment is through the small rear access panel as illustrated below.

Figure 4

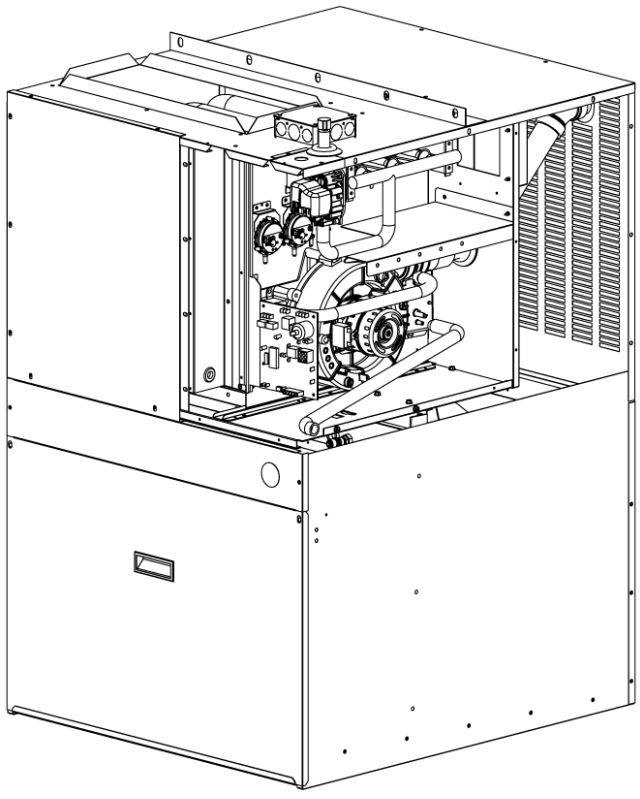

Inspect the Heat Exchanger

Remove the heat furnace door panel (See page 30). Remove any dirt or dust accumulation. Visually check the heat exchanger for cracks and holes. If a crack or hole is observed, replace the heat exchanger. Thorough inspection of the heat exchanger can be done with furnace slid out of the cabinet. (See pages 30 & 31)

Burner Service

Inspect the burner/control compartment annually to determine if cleaning is necessary. Open the burner/control compartment and on the burner housing, clean the compartment and follow the instructions below to remove and clean the burner.

Burner Assembly Removal and Cleaning

Removal and Cleaning of Burners

If the burners must be cleaned, follow steps 1-12.

1. Shut off gas supply to the furnace at the meter or at a manual valve in the supply piping.
2. Turn off all power to the furnace and set the thermostat to its lowest setting.
3. Remove the upper cabinet panel to expose the heat exchanger section and the burner/control compartment (See Figure 2).
4. Turn the gas control switch to the OFF position.
5. Label and disconnect the wires from the gas valve, igniter, flame sensor, and flame rollout switch.
6. Using two wrenches, separate the ground-joint union in the gas supply piping at the furnace.
7. If applicable, remove the piping between the Gas Valve and the ground-joint union.
8. Remove the furnace from the cabinet for easier burner removal. (See page 32& 33)
9. Remove the (4) screws securing the Manifold Assembly to the Burner Box.
10. Remove the (4) screws securing the burner box to the heat exchanger panel. Carefully remove the burner assembly from the furnace.
11. Inspect the burners for accumulated dust or debris. If necessary carefully clean them with a soft wire brush and a vacuum cleaner.
    a. If the burners need to be replaced, remove the flame sensor and igniter and set aside. With these removed, the individual burners can be replaced by removing the (2) screws securing the burners to the burner box.
12. Replace all the parts in reverse order from which they were removed.

Figure 5

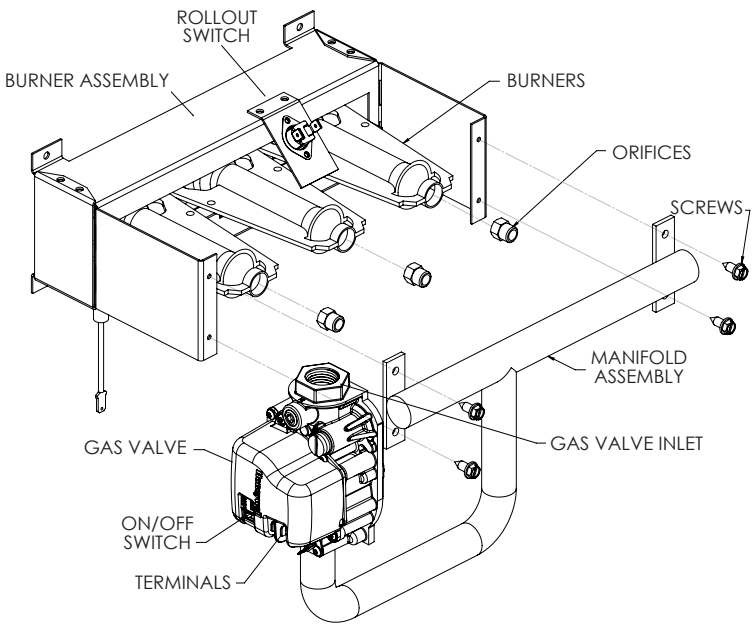

Note: If any of the burner components are damaged or deteriorated, replace the burner assembly.

Burner Orifice

Burner orifice only needs to be replaced when a change in gas is made. When ordering a replacement orifice, give BTU/H content and specific gravity of gas, as well as the model and serial number of the unit. Remove the gas manifold to remove the orifices.

Ignition System

Igniter - Locate the igniter beneath the burner assembly. Disconnect the wire; remove the screw and the igniter. Clean the igniter assembly with an emery cloth. Spark gap must be maintained to 1/8" See Figure 6 below.

Flame Sensor - Locate the flame sensor beneath the burner assembly. Disconnect the wire; remove the screw and the flame sensor. Clean with an emery cloth.

Figure 6

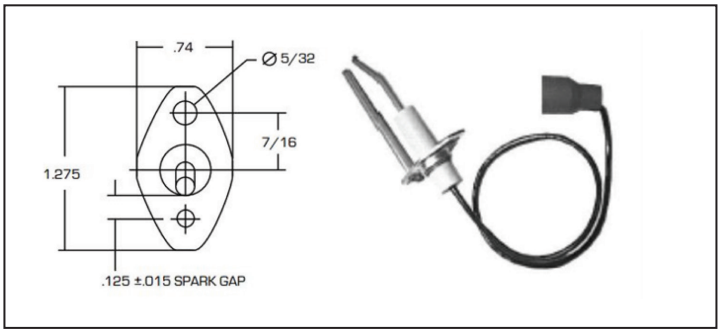

DSI Integrated Control Module - The module monitors the operation of the heater including ignition. The only replaceable component is the 3 amp fuse. If the fuse is blown, the problem is most likely an external overload. Correct the problem and replace the fuse. Do not attempt to disassemble the control module. However, each heating season check the lead wires for insulation deterioration and good connections.

⚠ CAUTION

Due to high voltage on the spark wire and electrode, do not touch when energized. See hazard levels, page 5.

⚠ PRUDENCE

En raison de la haute tension sur le fil d'étincelle et l'électrode, ne pas toucher quand Énergisé. Voir niveaux de danger, page 5.

DSI Integrated Control Module - The module monitors the operation of the heater including ignition. The only replaceable component is the 3 amp fuse. If the fuse is blown, the problem is most likely an external overload. Correct the problem and replace the fuse. Do not attempt to disassemble the control module. However, each heating season check the lead wires for insulation deterioration and good connections.

Proper operation of the direct spark ignition system requires a minimum flame signal of 1.0 microamps as measured by a microammeter.

For further information and check out procedure on the direct spark ignition system, refer to the circuit board manufacturer's instructions supplied with the heater.

Venter Motor and Wheel Assembly

Removal of Venter Motor

1. Shut off gas supply to the furnace at the meter or at a manual valve in the supply piping.
2. Turn off all power to the furnace and set the thermostat to its lowest setting.
3. Remove the upper cabinet panel to expose the heat exchanger section and the burner/control compartment (see Figure 2).
4. Turn the gas control switch to the OFF position.
5. Using two wrenches, separate the ground-joint union in the gas supply piping at the furnace.
6. Remove the piping between the Gas Valve and the ground-joint union. (If applicable).
7. Remove the furnace from the cabinet for easier venter motor removal. (See pages 32 & 33).
8. Label and disconnect the wires going to the venter motor as well as the green ground wire on the venter motor.
9. With the furnace removed from the cabinet, remove the (4) screws securing the venter motor to the condensate collection box.
10. Replace all the parts in reverse order from which they were removed.
11. Follow the lighting instructions found on the furnace door to return the furnace to operation. Verify proper operation after servicing.

Limit Control

If it is determined that a limit control needs replacing, use only the factory-authorized replacement part that is designed for the size of heater. The limit control is accessible in the control compartment. For approximate limit control location see Figure 1.

Gas Valve

The gas valve requires no field maintenance except careful removal of external dirt accumulation and checking of wiring connections. Instructions for testing pressure settings are in paragraph entitled “Gas Piping and Pressures".

⚠ CAUTION

The operating valve is the primary safety shutoff. All gas supply lines must be free of dirt or scale before connecting to the unit to ensure positive closures. See Hazard Intensity Levels, page 5.

⚠ PRUDENCE

La vanne de fonctionnement est le principal arrêt de sécurité. Toutes les conduites d’alimentation en gaz doivent être exemptes de saleté ou de balance avant d’être connectées à l’unité pour assurer des fermetures positives. Voir les niveaux d’intensité des dangers, page 5

Pressure Switch

If it is determined that the pressure switch needs replacing, use only the factory-authorized replacement part that is designed for this heater. For approximate location see Figure 4.

Flame Rollout Switch

For approximate location see Figure 5. The cause of a flame rollout switch activating must be determined. Activation of the manually reset flame rollout switch could be caused by one or more of the following: • Restricted or plugged heat exchanger. • Pressurization of the heat exchanger. • Restricted combustion air inlet or exhaust outlet in combination with a defective pressure switch. • Electrical power interruption during operation. If a flame rollout switch trips, inspect the burner/control compartment for signs of excessive heat and burned wiring.

If the compartment appears normal, reset by depressing the red button on the switch. 15 to 20 minutes are required for the switch to cool sufficiently for resetting. A distinct click will be felt when the switch resets. Operate the furnace. If the flame rollout switch trips again, determine and correct the cause before resetting the switch.

If there is damage to the burner/control compartment, repairs must be made before resetting the switch.

If it is determined that the flame rollout switch needs replacing, use only the factory-authorized replacement part that is designed for that size of heater.

Vent System

Check at least once a year. Inspect all joints and seams. Replace any defective parts.

Maintenance

- Clean Trap annually or more often if required
- Ensure that bleed holes of the Trap are not blocked
- Remove Trap before cleaning cooling coil with chemical cleaner.

Troubleshooting

Check the DSI Integrated Control Module (Circuit Board) - The Integrated Circuit Board monitors the operation of the heater and includes an LED signal that indicates normal operation and various abnormal conditions. If the heater fails to operate properly, check this signal to determine the cause and/or to eliminate certain causes.

Do not attempt to repair the DSI integrated control module; the only field replaceable component is the fuse.

CONTROL STATUS	GREEN LED
STEADY OFF	Internal control fault or no power
STEADY ON	Normal operation, no call for heat
FAST FLASH	Normal operation, call for heat present
1 FLASH	In lockout from failed ignition or flame loss
2 FLASH	Pressure switch does not close within 240 seconds
3 FLASH	Limit switch has caused lockout
4 FLASH	Pressure switch is closed before inducer is energized
FLAME STATUS	**YELLOW LED**
STEADY ON	Flame sensed
SLOW FLASH	Weak flame (current below 1.0 microamps = +/-50%)
FAST FLASH	Undesired flame (valve open and no call for heat)

Directions to Slide Out the Furnace
(After removing front panels)

Important Note: if the optional (CPFP) freeze protection kit is installed it must be removed prior to sliding out the furnace. Refer to the freeze protection kit installation instructions for more detail.

1. Remove the (2) screws indicated at the right.

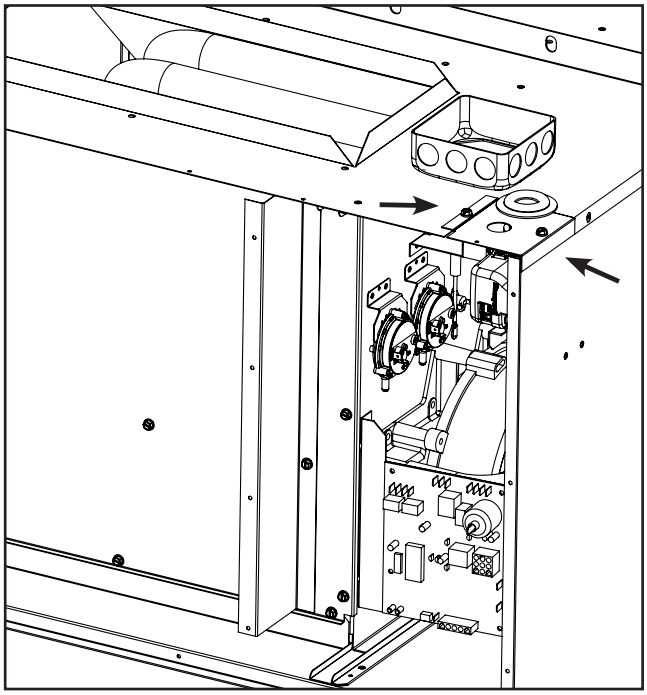

3. Remove the (11) screws.

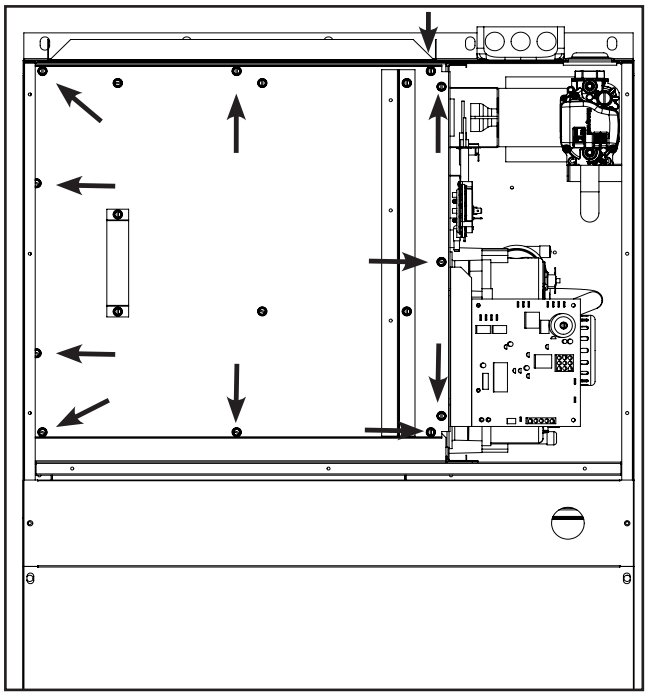

2. Remove the patch plate.

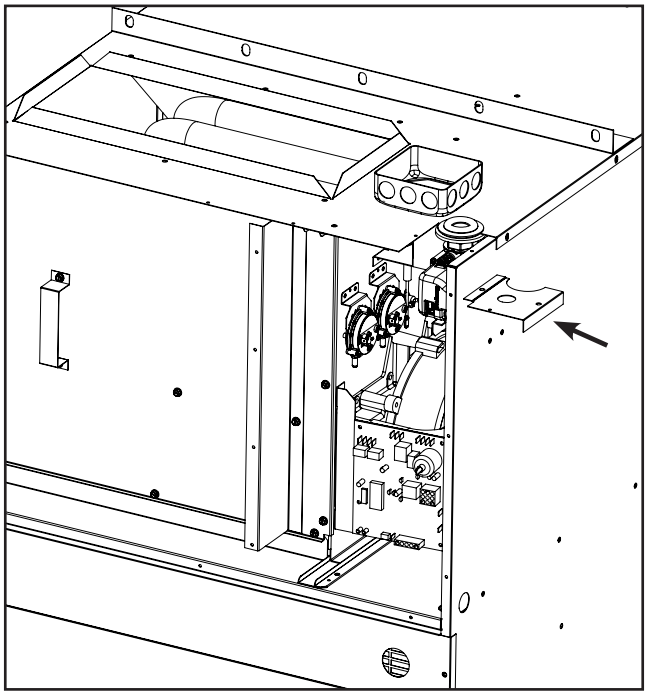

4. Remove front furnace baffle.

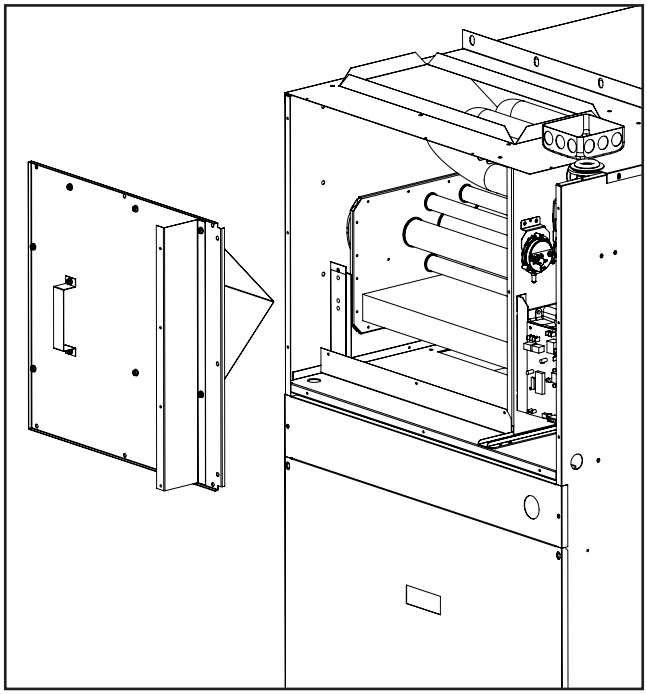

5. Remove (2) screws.

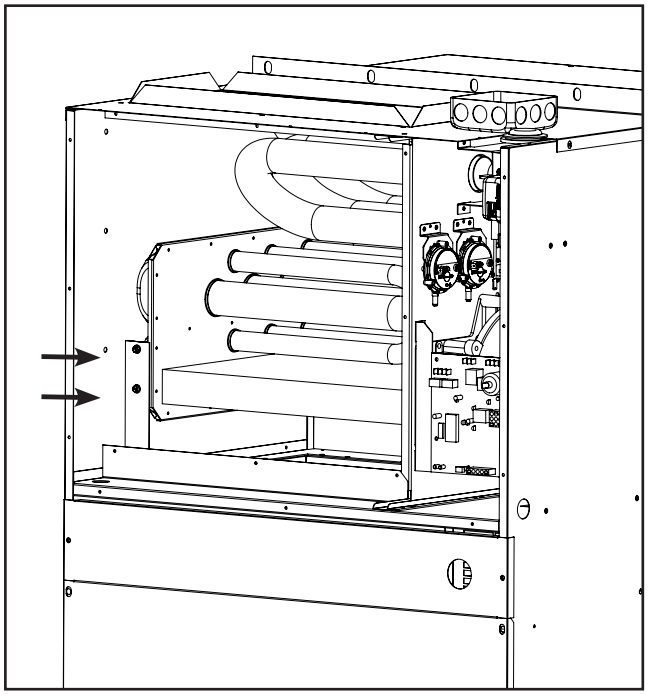

6. Remove support bracket.

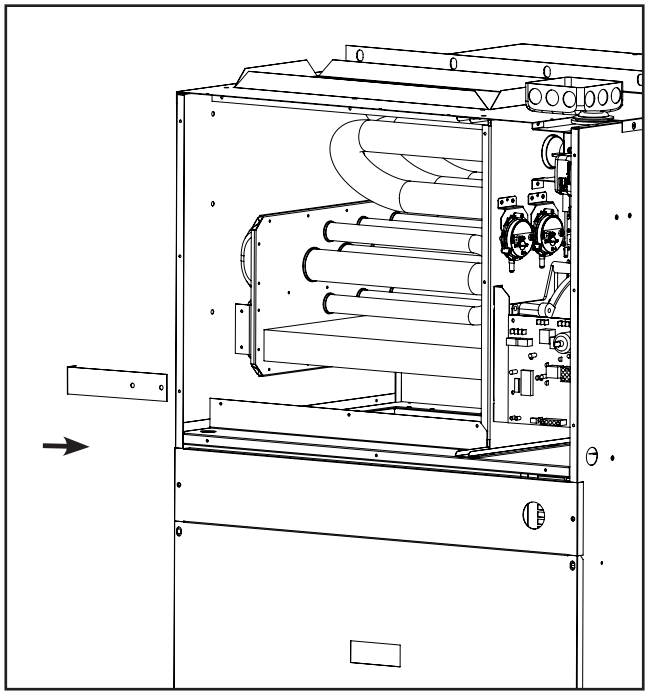

7. Remove furnace.

*Disconnect wire harnesses and loosen hose clamp on flue before sliding furnace out.

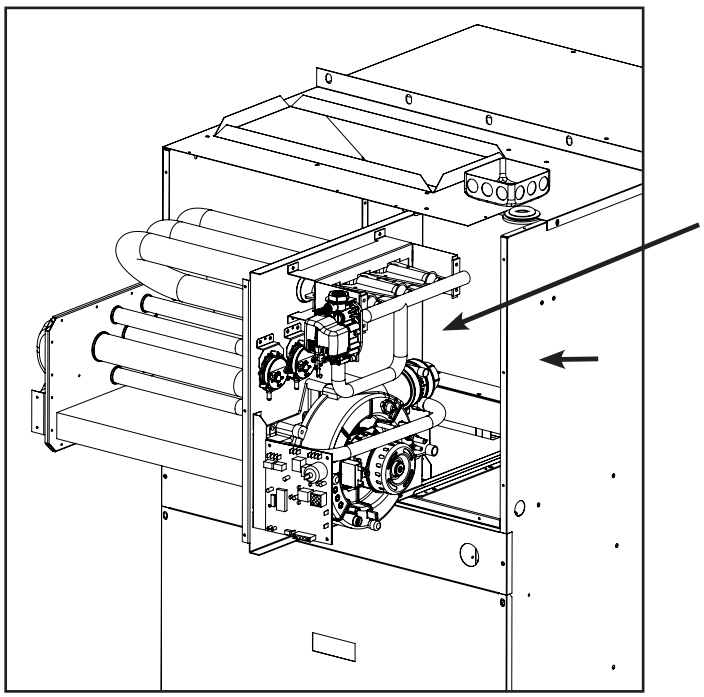

***Note:** Be careful with the secondary HX since the fins can be damaged easily. When setting it down, make sure it is tilted toward Burner to keep any condensate out of the rear collector pans to avoid leakage.

Performance Data

Up to 12.5 SEER2 - Up to 95% AFUE									
Model	**Nominal Cooling Tons**	**Cooling Btu/h**	**Sensible Btu/h**	**SEER2**	**Charge R-454B (Oz.)**	**AFUE**	**Heater Input (Btu/h)**	**Heater Output (Btu/h)**	**Shipping Weight (lbs)**
CP950925UA	**0.75**	**8,900**	**6,500**	**11.7**	**30**	**95%**	**25,000**	**23,750**	**315**
CP951225UA	**1.0**	**11,800**	**8,500**	**12.3**	**30**	**95%**	**25,000**	**23,750**	**315**
CP951232UA	**1.0**	**11,800**	**8,500**	**12.3**	**30**	**95%**	**32,000**	**30,400**	**315**
CP951825UA	**1.5**	**17,600**	**12,900**	**12.5**	**42**	**95%**	**25,000**	**23,750**	**325**
CP951832UA	**1.5**	**17,600**	**12,900**	**12.5**	**42**	**95%**	**32,000**	**30,400**	**325**
CP951843UA	**1.5**	**17,600**	**12,900**	**12.5**	**42**	**95%**	**43,000**	**40,850**	**325**
CP951850UA	**1.5**	**17,600**	**12,900**	**12.5**	**42**	**93%**	**50,000**	**46,500**	**325**
CP952425UA	**2.0**	**22,400**	**15,600**	**12.3**	**40**	**95%**	**25,000**	**23,750**	**350**
CP952432UA	**2.0**	**22,400**	**15,600**	**12.3**	**40**	**95%**	**32,000**	**30,400**	**350**
CP952443UA	**2.0**	**22,400**	**15,600**	**12.3**	**40**	**95%**	**43,000**	**40,850**	**350**
CP952450UA	**2.0**	**22,400**	**15,600**	**12.3**	**40**	**93%**	**50,000**	**46,500**	**350**

Electrical Data

Model	Voltage	Compressor		Condenser Motor			Blower Motor		Total Amps	MCA	MOP
		RLA	LRA	HP	FLA	LRA	HP	FLA			
CP950925UA	208/230-1-60	3.5	21.8	1/4	2.0	--	1/3	2.6	8.1	9.0	15
CP951225UA	208/230-1-60	4.7	28.7	1/4	2.0	--	1/3	2.6	9.3	10.5	15
CP951232UA	208/230-1-60	4.7	28.7	1/4	2.0	--	1/3	2.6	9.3	10.5	15
CP951825UA	208/230-1-60	6.3	32.7	1/4	1.8	3.6	1/3	2.6	10.7	12.3	15
CP951832UA	208/230-1-60	6.3	32.7	1/4	1.8	3.6	1/3	2.6	10.7	12.3	15
CP951843UA	208/230-1-60	6.3	32.7	1/4	1.8	3.6	1/3	2.6	10.7	12.3	15
CP951850UA	208/230-1-60	6.3	32.7	1/4	1.8	3.6	1/3	2.6	10.7	12.3	15
CP952425UA	208/230-1-60	8.4	41.2	1/4	2.0	--	1/2	3.8	14.2	16.3	25
CP952432UA	208/230-1-60	8.4	41.2	1/4	2.0	--	1/2	3.8	14.2	16.3	25
CP952443UA	208/230-1-60	8.4	41.2	1/4	2.0	--	1/2	3.8	14.2	16.3	25
CP952450UA	208/230-1-60	8.4	41.2	1/4	2.0	--	1/2	3.8	14.2	16.3	25

Other Options

CPWS	Wall Sleeve (Unassembled)
CPWSA	Wall Sleeve Adapter (Unassembled)
CPLGX	Architectural Louver Grille
CPLGX-S	Architectural Louver Grille for Sleeve
CPLGX-P	Architectural Louver Grille Painted
CPLGX-SP	Architectural Louver Grille for Sleeve Painted
CPSGX-P	Stamped Grille Painted
A	Standard
B	Slotted Door
C	without Rear Grille
D	Both B & C
14508008	25K LP Conversion Kit
	43K LP Conversion Kit* (35,000 input)
	50K LP Conversion Kit

Check Your Temperature Rise

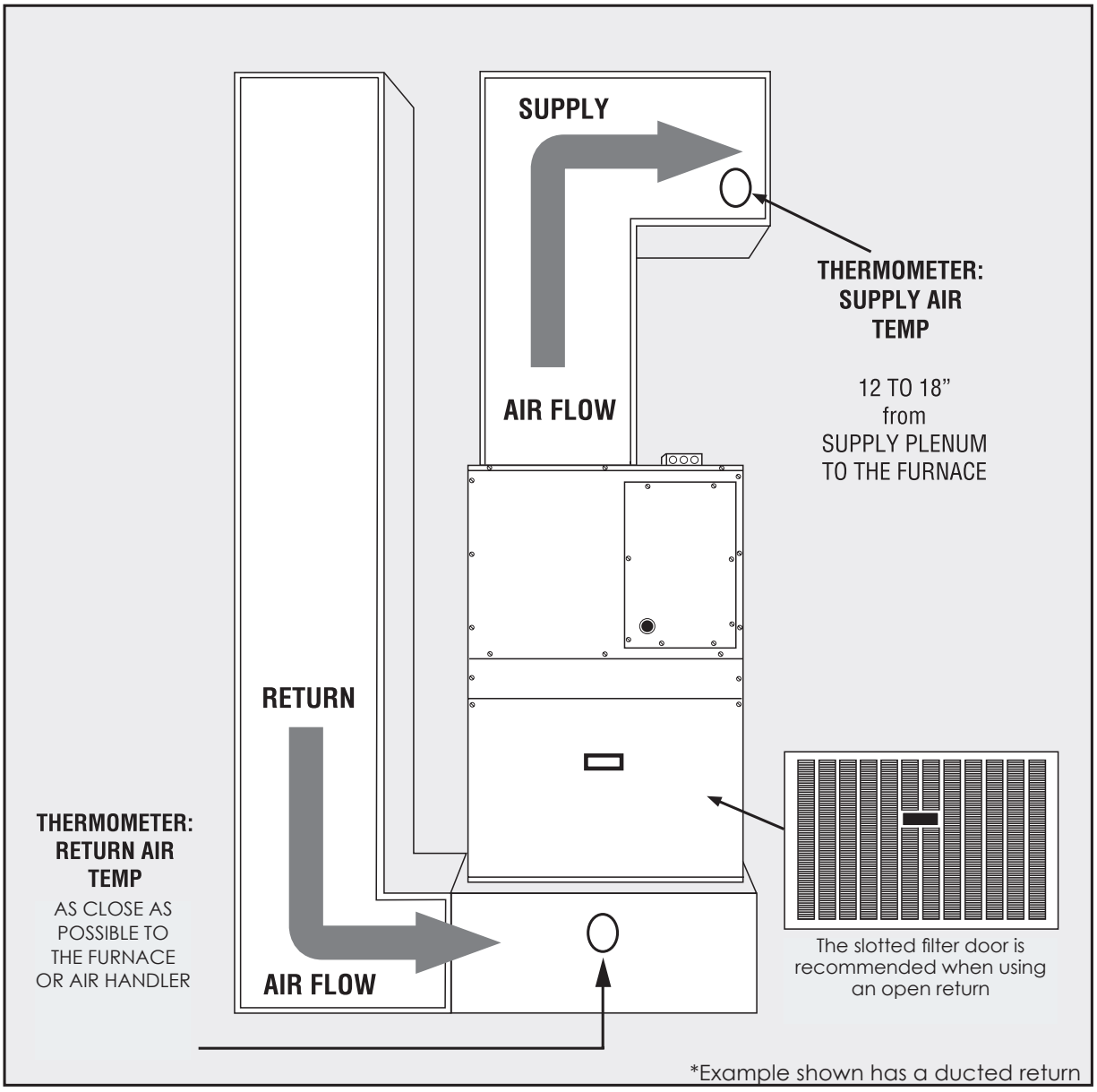

The temperature rise should be as follows

25MBH = 45°F Nominal (30°F to 60°F)
32MBH = 50°F Nominal (35°F to 65°F)
43MBH = 50°F Nominal (35°F to 65°F)
50MBH = 55°F Nominal (40°F to 70°F)

In order to calculate CFM use the formula
CFM = BTU Output / (1.08 x Temp. Rise)

See page 38 for airflow data.

Comfort Pack Gas CFM and Temperature Rise 25,000 BTU Input												
UNIT SIZE	**COLOR**	**SPEED**	**.1" w.c.**	**TD**	**.2" w.c.**	**TD**	**.3" w.c.**	**TD**	**.4" w.c.**	**TD**	**.5" w.c.**	**TD**
CP950925UA	Red	1	760	28.9	745	29.5	730	30.1	715	30.8	700	31.4
	Yellow	2	650	33.8	640	34.4	630	34.9	615	35.8	600	36.7
	Blue	3	560	39.3	535	41.1	520	42.3	510	36.1	500	44.0
	Black	4	440	50.0	425	51.7	410	53.6	390	56.4	370	59.4
	Orange	5	390	56.4	360	61.1	330	66.6	310	70.9	290	75.8
CP951225UA	Red	1	760	28.9	745	29.5	730	30.1	715	30.8	700	31.4
	Yellow	2	650	33.8	640	34.4	630	34.9	615	35.8	600	36.7
	Blue	3	560	39.3	535	41.1	520	42.3	510	36.1	500	44.0
	Black	4	440	50.0	425	51.7	410	53.6	390	56.4	370	59.4
	Orange	5	390	56.4	360	61.1	330	66.6	310	70.9	290	75.8
CP951825UA	Red	1	760	28.9	745	29.5	730	30.1	715	30.8	700	31.4
	Yellow	2	650	33.8	640	34.4	630	34.9	615	35.8	600	36.7
	Blue	3	560	39.3	535	41.1	520	42.3	510	36.1	500	44.0
	Black	4	440	50.0	425	51.7	410	53.6	390	56.4	370	59.4
	Orange	5	390	56.4	360	61.1	330	66.6	310	70.9	290	75.8
CP952425UA	Red	1	870	25.3	850	25.9	830	26.5	810	27.1	790	27.8
	Yellow	2	760	28.9	745	29.5	730	30.1	715	30.8	690	31.9
	Blue	3	680	32.3	665	33.1	650	33.8	630	34.9	610	36.1
	Black	4	590	37.3	565	38.9	540	40.7	525	41.9	510	43.1
	Orange	5	440	50.0	425	51.7	410	53.6	400	55.0	390	56.4

= Factory Heat Speed Setting

Comfort Pack Gas CFM and Temperature Rise 32,000 BTU Input												
UNIT SIZE	**COLOR**	**SPEED**	**.1" w.c.**	**TD**	**.2" w.c.**	**TD**	**.3" w.c.**	**TD**	**.4" w.c.**	**TD**	**.5" w.c.**	**TD**
CP951232UA	Red	1	760	37.0	745	37.8	730	38.6	715	39.4	700	40.2
	Yellow	2	650	43.3	640	44.0	630	44.7	615	45.8	600	46.9
	Blue	3	560	50.3	535	52.6	520	54.1	510	46.1	500	56.3
	Black	4	440	64.0	425	66.2	410	68.7	390	72.2	370	76.1
	Orange	5	390	72.2	360	78.2	330	85.3	310	90.8	290	97.1
CP951832UA	Red	1	760	37.0	745	37.8	730	38.6	715	39.4	700	40.2
	Yellow	2	650	43.3	640	44.0	630	44.7	615	45.8	600	46.9
	Blue	3	560	50.3	535	52.6	520	54.1	510	46.1	500	56.3
	Black	4	440	64.0	425	66.2	410	68.7	390	72.2	370	76.1
	Orange	5	390	72.2	360	78.2	330	85.3	310	90.8	290	97.1
CP952432UA	Red	1	870	32.4	850	33.1	830	33.9	810	34.8	790	35.6
	Yellow	2	760	37.0	745	37.8	730	38.6	715	39.4	690	40.8
	Blue	3	680	41.4	665	42.3	650	43.3	630	44.7	610	46.1
	Black	4	590	47.7	565	49.8	540	52.1	525	53.6	510	55.2
	Orange	5	440	64.0	425	66.2	410	68.7	400	70.4	390	72.2

= Factory Heat Speed Setting

Comfort Pack Gas CFM and Temperature Rise 43,000 BTU Input												
UNIT SIZE	COLOR	SPEED	.1" w.c.	TD	.2" w.c.	TD	.3" w.c.	TD	.4" w.c.	TD	.5" w.c.	TD
CP951843UA	Red	1	760	49.8	745	50.8	730	51.8	715	52.9	700	54.0
	Yellow	2	650	58.2	640	59.1	630	60.0	615	61.5	600	63.0
	Blue	3	560	67.5	535	70.7	520	72.7	510	62.0	500	75.6
	Black	4	440	86.0	425	89.0	410	92.3	390	97.0	370	102.2
	Orange	5	390	97.0	360	105.1	330	114.6	310	122.0	290	130.4
CP952443UA	Red	1	870	43.5	850	44.5	830	45.6	810	46.7	790	47.9
	Yellow	2	760	49.8	745	50.8	730	51.8	715	52.9	690	54.8
	Blue	3	680	55.6	665	56.9	650	58.2	630	60.0	610	62.0
	Black	4	590	64.1	565	66.9	540	70.0	525	72.0	510	74.2
	Orange	5	440	86.0	425	89.0	410	92.3	400	94.6	390	97.0

= Factory Heat Speed Setting

Comfort Pack Gas CFM and Temperature Rise 50,000 BTU Input												
UNIT SIZE	COLOR	SPEED	.1" w.c.	TD	.2" w.c.	TD	.3" w.c.	TD	.4" w.c.	TD	.5" w.c.	TD
CP951850UA	Red	1	760	56.7	745	57.8	730	59.0	715	60.2	700	61.5
	Yellow	2	650	66.2	640	67.3	630	68.3	615	70.0	600	71.8
	Blue	3	560	76.9	535	80.5	520	82.8	510	70.6	500	86.1
	Black	4	440	97.9	425	101.3	410	105.0	390	110.4	370	116.4
	Orange	5	390	110.4	360	119.6	330	130.5	310	138.9	290	148.5
CP952450UA	Red	1	870	49.5	850	50.7	830	51.9	810	53.2	790	54.5
	Yellow	2	760	56.7	745	57.8	730	59.0	715	60.2	690	62.4
	Blue	3	680	63.3	665	64.7	650	66.2	630	68.3	610	70.6
	Black	4	590	73.0	565	76.2	540	79.7	525	82.0	510	84.4
	Orange	5	440	97.9	425	101.3	410	105.0	400	107.6	390	110.4

= Factory Heat Speed Setting

Air Flow Data

Models	Color	Speed Tap	ESP (in. wc) / CFM				
			0.1	0.2	0.3	0.4	0.5
CP9509**UA	Red	1	760	745	730	715	700
	Yellow	2	650	640	630	615	600
	Blue	3	560	535	520	510	500
	Black	4	440	425	410	390	370
	Orange	5	390	360	330	310	290
CP9512**UA	Red	1	760	745	730	715	700
	Yellow	2	650	640	630	615	600
	Blue	3	560	535	520	510	500
	Black	4	440	425	410	390	370
	Orange	5	390	360	330	310	290
CP9518**UA	Red	1	760	745	730	715	700
	Yellow	2	650	640	630	615	600
	Blue	3	560	535	520	510	500
	Black	4	440	425	410	390	370
	Orange	5	390	360	330	310	290
CP9524**UA	Red	1	870	850	830	810	790
	Yellow	2	760	745	730	715	690
	Blue	3	680	665	650	630	610
	Black	4	590	565	540	525	510
	Orange	5	440	425	410	400	390

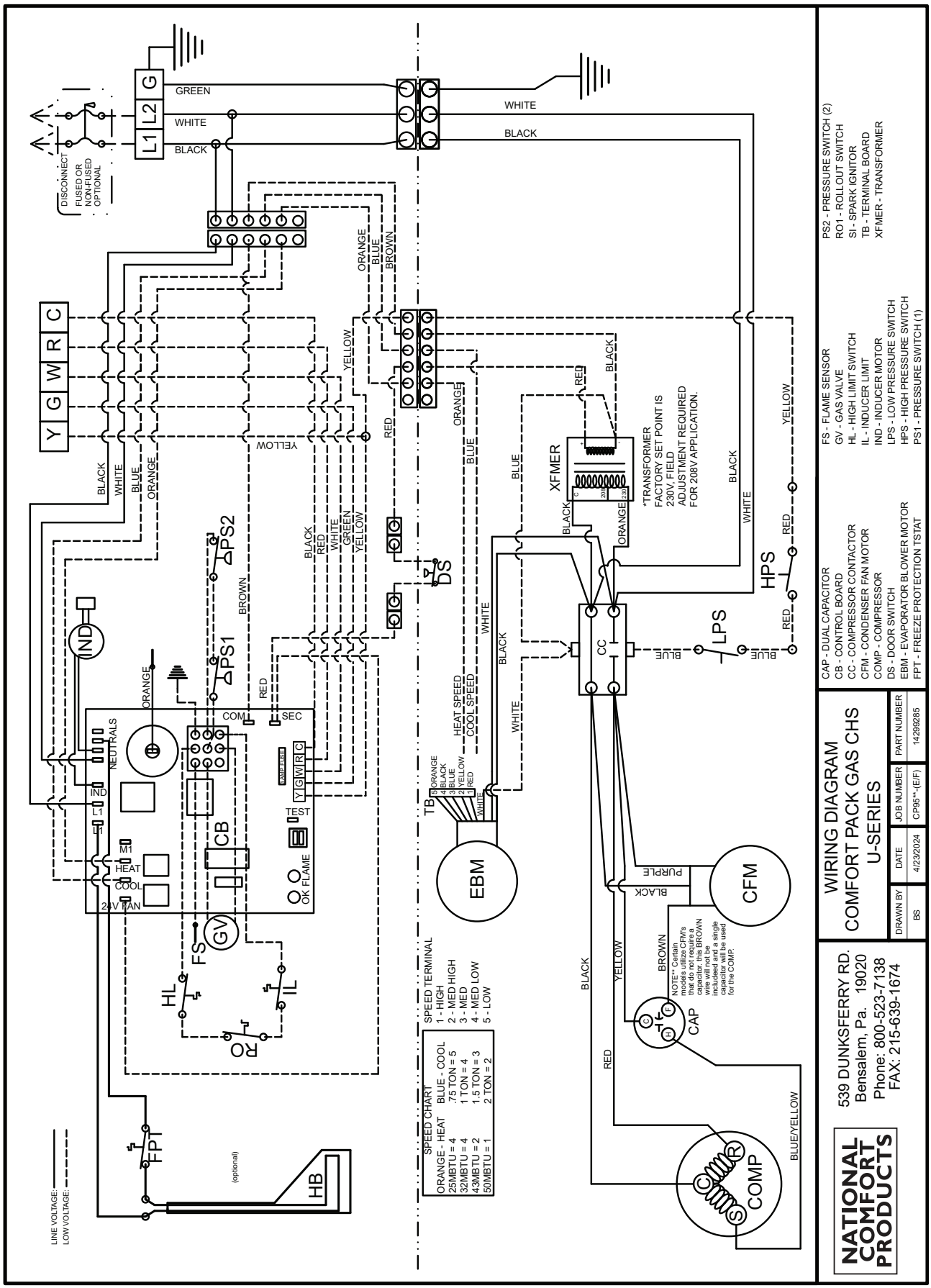
WIRING DIAGRAM
COMFORT PACK GAS CHS
U-SERIES
DRAWN BY BS
DATE 4/23/2024
JOB NUMBER CP95**-(E/F)
PART NUMBER 14299285
NATIONAL COMFORT PRODUCTS
539 DUNKSFERRY RD.
Bensalem, Pa. 19020
Phone: 800-523-7138
FAX: 215-639-1674
CAP - DUAL CAPACITOR
CB - CONTROL BOARD
CC - COMPRESSOR CONTACTOR
CFM - CONDENSER FAN MOTOR
COMP - COMPRESSOR
DS - DOOR SWITCH
EBM - EVAPORATOR BLOWER MOTOR
FPT - FREEZE PROTECTION TSTAT
FS - FLAME SENSOR
GV - GAS VALVE
HL - HIGH LIMIT SWITCH
IL - INDUCER LIMIT
IND - INDUCER MOTOR
LPS - LOW PRESSURE SWITCH
HPS - HIGH PRESSURE SWITCH
PS1 - PRESSURE SWITCH (1)
PS2 - PRESSURE SWITCH (2)
RO1 - ROLLOUT SWITCH
SI - SPARK IGNITOR
TB - TERMINAL BOARD
XFMER - TRANSFORMER
*TRANSFORMER FACTORY SET POINT IS 230V, FIELD ADJUSTMENT REQUIRED FOR 208V APPLICATION.
NOTE** Certain models utilize CFM's that do not require a capacitor, this BROWN wire will not be included and a single capacitor will be used for the COMP.
SPEED CHART
ORANGE - HEAT BLUE - COOL
25MBTU = 4 .75 TON = 5
32MBTU = 4 1 TON = 4
43MBTU = 2 1.5 TON = 3
50MBTU = 1 2 TON = 2
SPEED TERMINAL
1 - HIGH
2 - MED HIGH
3 - MED
4 - MED LOW
5 - LOW
LINE VOLTAGE:
LOW VOLTAGE:
DISCONNECT FUSED OR NON-FUSED OPTIONAL
(optional)
NEUTRALS
24V FAN
HEAT
COOL
OK FLAME
TEST
COM
SEC
HEAT SPEED
COOL SPEED
PURPLE
BLUE/YELLOW
GREEN
WHITE
BLACK
BROWN
YELLOW
RED
ORANGE
BLUE
L1
L2
G
Y
G
W
R
C
IND
PS1
PS2
CB
GV
FS
HL
IL
RO
FPT
HB
DS
TB
EBM
CC
LPS
HPS
CFM
CAP
COMP
XFMER

CONTROL STATUS	GREEN LED
STEADY OFF	Internal control fault or no power
STEADY ON	Normal operation, no call for heat
FAST FLASH	Normal operation, call for heat present
1 FLASH	In lockout from failed ignition or flame loss
2 FLASH	Pressure switch does not close within 240 seconds
3 FLASH	Limit switch has caused lockout
4 FLASH	Pressure switch is closed before inducer is energized
FLAME STATUS	**YELLOW LED**
STEADY ON	Flame sensed
SLOW FLASH	Weak flame (current below 1.0 microamps = +/-50%)
FAST FLASH	Undesired flame (valve open and no call for heat)

FAN OFF DELAY		
TIME	SWITCH	
	1	2
90	OFF	ON
120	OFF	OFF
160	ON	OFF
45	ON	ON

FIELD CONTROL WIRING		
TOTAL WIRE LENGTH	DISTANCE FROM UNIT TO CONTROL	MIN. RECOMMENDED WIRE GAUGE
150’	75’	#18 GAUGE WIRE
250’	125’	#16 GAUGE WIRE
350’	175’	#14 GAUGE WIRE

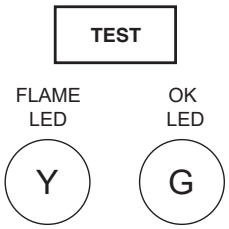

Operation Sequence

1. Set thermostat at lowest setting.
2. Turn on manual gas valve.
3. Turn on power to unit.
4. Set thermostat at desired setting.
5. Thermostat calls for heat, energizing the venter motor.
6. Venter pressure switch closes, firing unit.
7. Burner flame is sensed, and in 20 seconds the fan motor is energized.
8. If the flame is extinguished during main burner operation, the integrated control system closes the main valve and must be reset by interrupting power to the control circuit (see lighting instructions).

Notes

1. The following control is a field-installed option: thermostat.
2. Dotted wiring installed by others.
3. Caution: if any of the original wiring as supplied with the appliance must be replaced, it must be replaced with wiring material having a temperature rating of at least 105°C except for sensor lead wire and limit wiring which must be 150°C.
4. Use 18 gauge wire for all low voltage wiring on the unit or follow chart above.
5. Line and fan motor branch wire sizes should be of a size to prevent voltage drops beyond 5% of supply line voltage. **(Use copper conductors only).**
6. Ground wire must be used.

TROUBLSHOOTING		
PROBLEM	**PROBABLE CAUSE**	**REMEDY**
Venter motor will not start	1. No power to unit 2. No 24 volt power to integrated circuit board. 3. Integrated circuit board fuse blown. 4. Integrated circuit board defective. 5. Defective motor.	1. Turn power, check supply fuses or circuit breaker 2. Turn up thermostat; check control transformer output 3. Correct cause. Replace fuse (type ATC, 24VAC, 3A) 4. Replace integrated circuit board 5. Replace motor
Burner will not light	1. Manual valve not open 2. Air in the gas line 3. Gas pressure too high or too low 4. No spark: a. Loose wire connections b. Transformer failure c. Incorrect spark gap. d. Spark cable shorted to ground e. Spark electrode shorted to ground f. Burner not grounded g. Circuit board not grounded h. Integrated circuit board fuse blown i. Faulty integrated circuit board 5. Lockout device interrupting control circuit by above causes 6. Faulty combustion air proving switch 7. Main valve not operating a. Defective valve b. Loose wire connections 8. Integrated circuit board does not power main valve a. Loose wire connections b. Flame sensor grounded c. Incorrect gas pressure d. Cracked ceramic at sensor	1. Open manual valve 2. Bleed gas line (initial startup only) 3. Correct supply pressure is 5” - 14” w.c. for natural gas or 11” - 14” w.c. for propane gas 4. a. Be certain all wire connections are solid b. Be sure 24 volts are available c. Maintain spark gap at ⅛” d. Replace worn or grounded spark cable e. Replace if ceramic spark electrode is cracked or grounded f. Make certain integrated circuit board is grounded to ignitor g. Make certain integrated circuit board is grounded to furnace chassis h. Correct cause; replace fuse (type ATC, 24VAC, 3A) i. If 24 volt is available to the integrated circuit board and all other causes have been eliminated, replace board 5. Reset lockout by interrupting control at the thermostat or main power 6. Replace combustion air proving switch 7. a. If 24 volt is measured at the valve connections and valve remains closes, replace valve b. Check and tighten all wiring connections 8. a. Check and tighten all wiring connections b. Be certain flame sensor lead is not grounded or insulation or ceramic is not cracked. Replace as required c. Correct supply pressure is 5” -14” w.c. for natural gas or 11” - 14” w.c. for propane gas d. Replace sensor
Burner cycle on and off	1. Gas pressure too high or too low 2. Burner not grounded 3. Circuit board not grounded 4. Faulty integrated circuit board 5. Faulty combustion air proving switch 6. Flame sensor grounded 7. Cracked ceramic at sensor	1. Correct supply pressure is 5” -14” w.c. for natural gas or 11” - 14” w.c. for propane gas 2. Make certain integrated circuit board is grounded to ignitor 3. Make certain integrated circuit board is grounded to furnace chassis 4. If 24 volt is available to the integrated circuit board and all other causes have been eliminated, replace board 5. Replace combustion air proving switch 6. Be certain flame sensor lead is not grounded or insulation or ceramic is not cracked; Replace as required 7. Replace sensor
No heat (heater operating)	1. Incorrect valve outlet pressure or orifice 2. Cycling on limit control 3. Improper thermostat location or adjustment	1. Check valve outlet pressure 2. Check air throughput 3. See thermostat manufacturer’s instructions
Cold air delivered	1. Incorrect valve outlet pressure	1. Check valve outlet pressure
Unit blower motor will not run	1. Circuit open 2. Defective Integrated circuit board 3. Defective motor	4. Check wiring and connections 5. Replace board 6. Replace motor
Unit blower motor turns on and off while burner is operating	1. Motor overload device cycling on and off	1. Check motor lead against motor rating plate; replace motor if needed
Unit blower motor cuts out on overload	1. Low or high voltage supply 2. Defective motor 3. Poor air flow 4. Defective bearing or lubrication	1. Correct electric supply 2. Replace motor 3. Clean motor, fan, fan guard, filter and coils 4. Lubricate bearings or replace motor

Replacement Parts Guide

To assure accuracy when ordering replacement parts, please provide the following information:

EXAMPLE:
Unit Model:
Serial #:
Part #:

Replacement Parts Guide | Cabinet and Furnace Parts

Cabinet Parts				
Part Description	Part Number			
	25 MBH	32 MBH	43 MBH	50 MBH
Upper Front Panel, Left	14256026-B			
Baffle, Front	14256032			
Support, Door	14256034			
Angle Support Bracket	14256035			
Furnace Door	14256036			
Angle Support	14256038			
Side Angle	14256040			
Side Panel, Right	14256041			
Side Panel, Left	14256042			
Vertical Air Divider	14256043			
Horizontal Air Divider	14256044			
Top Panel	14256045			
Patch Plate	14256046			
Air Intake Cover	14256047			
Upper Front Panel, Right	14256048			
Door Handle	14256050			
Bottom Angle Support	14256051			
Top Mounting Angle	14256101			
Lower Access Panel	14256123-01			
Side Seal Retainer	14256125			
Mounting Bracket Interlock Switch	14256156			
Controls Cover Panel	14256167-B			
Upper Rear Grille	14256436			
Lower Rear Grille	14256437			
Bottom Panel	14256600			
Rail	14256605			
Furnace Channel	14256663			
Blower Cover Mounting Strap	14256811			
Blower Cover Plate	14256812-B			
Cabinet Air Seal	14256813			
Flue Assembly	14231052			
Condensate Drain Tube (Long)	14231062			
Condensate Drain Tube (Short)	14231063			

Furnace Parts				
Part Description	Part Number			
	25 MBH	32 MBH	43 MBH	50 MBH
Gas Furnace	14208384	14208385	14208386	14208387
Baffle, Back	14256033	14256033	14256037	14256037
Baffle, Back Bottom	N/A	N/A	14256039	14256039
Natural Gas Orifice	14508001	14508002	14508003	14508004
LP Gas Orifice	14508005	N/A	14508006	14508007
Main Air Limit	14508011	14508012	14508013	14508013
Pressure Switch, Condensate	14508033	14508019	14508019	14508020
Inducer Orifice	14508032	14508025	14508026	14508027
Burner Box	14556003	14556004	14556005	14556005
Pressure Switch, Inducer	14508017			14508028
Interlock Switch	14265025			
LP Gas Conversion Kit	14508008	N/A	14508008	14508008
Burner	14508009			
Burner Manifold	14508030		14508031	
Flame Rollout Switch	14508010	14508029		
Inducer Limit	14508014			
DSI Electrode Assembly	14508015			
Flame Sensor	14508016			
Control Board	14208607-KIT			
Gas Valve	14508021			
Inducer	14508022			
Pressure Switch, Tubing	14508023			
Control Board Wires	14530001			
Drain Tube, Soft 'J'	14531001			
Control Board Bracket	14556001			
Outlet Header Box	14556002			
Waterless Trap	14231057			
Wire Harness - Furnace Control/Power	14230053			
Wire Harness - Control Board	14230054			
Wire Harness - To Door Switch	14230055			
Wire Harness - From Door Switch	14230056			
Safety Thermostat	14260024			

(Continued on next page)

Replacement Parts Guide | Chassis Parts				
Part Description	Part Number			
	0.75 Ton	1 Ton	1.5 Ton	2 Ton
Chassis Model				
Base Pan	142-56-067	142-56-067	142-56-070	142-56-070
Indoor Coil	142-08-392	142-08-392	142-08-396	142-08-396
Outdoor Coil	142-08-388	142-08-388	142-08-389	142-08-389
Compressor	142-10-282	142-10-283	142-10-284	142-10-285
Compressor Accessories	142-10-292			
Capacitor	142-25-390	142-25-390	142-25-372	142-25-396
TXV	142-75-149	142-75-149	142-75-150	142-75-150
Outdor Fan Motor	142-70-069	142-70-069	142-70-044	142-70-069
Outdoor Coil Mount	142-56-068		142-56-071	
Drier	142-75-171			
Outdoor Fan	142-14-042			
Outdoor Motor Mount Frame	142-56-079			
Outdoor Motor Mount Frame Support	142-56-073			
Outdoor Motor Mount Lid	142-56-082		142-56-080	142-56-082
Outdoor Motor Mount Strap	142-56-081			
Indoor Blower Motor	142-70-066			142-70-067
Blower Wheel	142-14-022			
Blower Housing	142-14-023			
Indoor Motor Mount	142-70-108			
Air Divider	142-56-415			
Indoor Coil Cover	142-56-647			
Indoor Coil Drain Pan	142-56-098			
Air Filter	142-32-002			
Wire Harness Controls	142-30-024			
Power Connecting Plugs	142-30-026			
Compressor Harness	142-30-057			
Contactor	142-62-101			
Transformer 208/240-24V	142-62-105			
5-Pole Terminal Board	142-63-062			
Low Pressure Switch	142-65-026			
High Pressure Switch	142-65-027			
3/4" ID Drain Tube	142-75-616			

IMPORTANT!!!

BEFORE REMOVING A WARRANTY COMPRESSOR, PLEASE FILL OUT THE FOLLOWING AND CALL (800) 523-7138.

REMOVAL OF COMPRESSOR WITHOUT FACTORY VERIFICATION CAN LEAD TO WARRANTY CREDIT BEING DENIED

1. Incoming Voltage to Compressor at Contactor is:_____Volts AC
2. Compressor Starting AMP Draw:_____ R
3. Compressor Winding OHM Reading between Terminals C & S:_____ Ω
4. Compressor Winding OHM Reading between Terminals C & R:_____ Ω
5. Compressor Winding OHM Reading between Terminals R & S:_____ Ω
6. Compressor Winding OHM Reading between Terminals C & Ground:_____ Ω
7. Compressor Winding OHM Reading between Terminals R & Ground:_____ Ω
8. Compressor Winding OHM Reading between Terminals S & Ground:_____ Ω

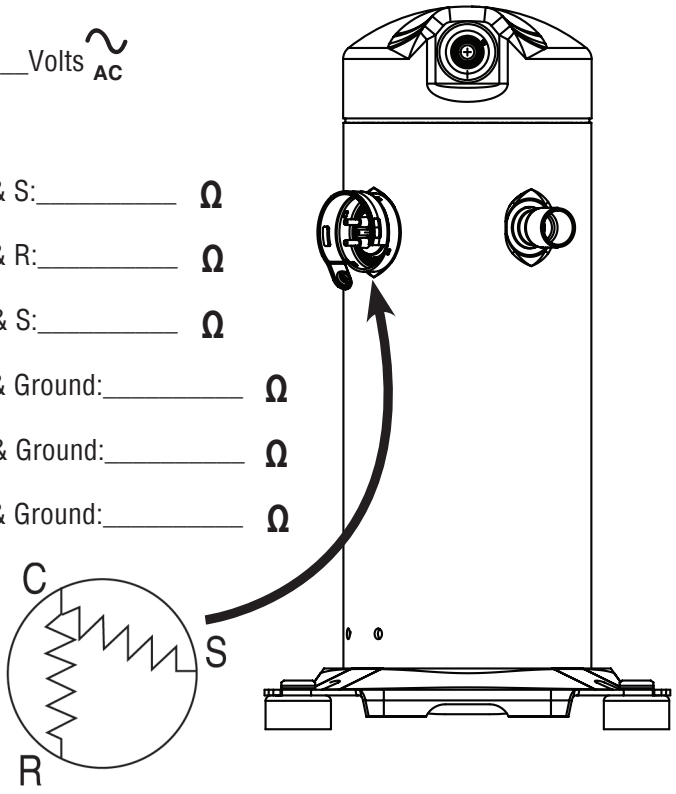

9. Run Capacitor Reading from HERM to COM:_____ µF
10. Start Capacitor Reading if Used:_____ µF

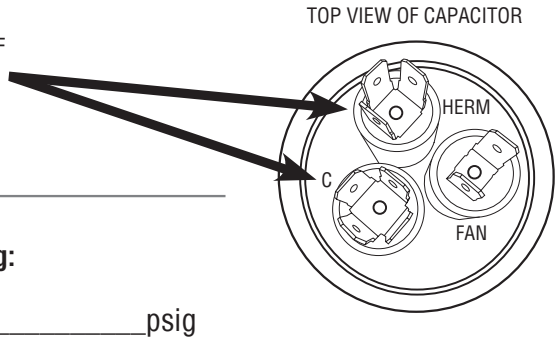

11. If the Compressor is Operating Please Indicate the Following:

Suction Pressure:_____psig Discharge Pressure:_____psig

Super Heat:_____F Subcooling:_____F

A Division of AeriTek

539 Dunksferry Road | Bensalem, PA 19020 | 215-244-1400 | 1-800-523-7138

COMFORT PACK
LIMITED WARRANTY

1. National Comfort Products warrants to its customers that its product shall be free from defects in material and workmanship under normal use and regular service and maintenance as follows:

HEAT EXCHANGERS (Gas units only): for twenty years from the date of original installation.

ALL OTHER PARTS: For all other parts except the Heat Exchanger, for five years from the date of original installation.

Customer must register the product within 60 days of purchase. If Customer cannot adequately document date of installation, then, for purposes of determining the warranty period, the date of installation shall be 60 days from the date of purchase.

2. This warranty does not extend to any damages or losses due to misuse, accident, abuse, neglect, normal wear and tear, negligence (other than National Comfort's), unauthorized modification or alteration; use beyond rated capacity; unsuitable power sources or environmental conditions; improper installation, repair, handling, maintenance or application; damage as a result of fire, wind, floods, lightning, or corrosive conditions; or any other cause not the fault of National Comfort. By way of example and without limitation, the following do not constitute a defect in workmanship and materials and are not covered by this warranty: slugging of liquid refrigerant or oil, unstable line voltage, lightning, operating without proper lubrication, and operating without factory provided safeties. Any installation that impairs or impedes air flow negatively impacts performance and causes premature equipment failure that voids this warranty. For example, installation behind a brick façade or the addition of a brick pattern façade, i.e. pigeon holes impedes air flow and shall void this warranty. No warranty will apply if the input section exceeds the rated input as indicated on the nameplate by more than 5%, or if the heat section in the judgement of the manufacture has been subject to misuse, negligence, accident, corrosive atmospheres, atmospheres contacting any contaminant (silicone, aluminum oxide, etc.), excessive thermal shock, physical damage, impact, abrasion, unauthorized alterations, or operation contrary to the manufacture's printed instructions, or if the serial number has been altered, defaced, or removed.

3. SOLE WARRANTY

The warranties identified herein constitute National Comfort's sole and exclusive warranties with respect to the goods and are in lieu of and exclude all other warranties, express or implied, arising by operation of law or otherwise, including without limitation, merchantability and fitness for a particular purpose whether or not the purpose or use has been disclosed to National Comfort in specifications, drawings or otherwise, and whether or not National Comfort's goods are specifically designed and/or manufactured by National Comfort for Customer's use or purpose.

4. LIMITATION OF REMEDY

The sole and exclusive remedy for breach of any warranty hereunder (other than the warranty provided herein) shall be limited to repair, replacement, credit or refund of the purchase price to distribution as set forth herein.

National Comfort is not responsible for any other item including but not limited to local transportation, freight, removal of any compressor or part, any labor associated therewith, service or diagnosis calls, refrigerant, or costs for returning any defective compressor or part.

5. LIMITATION OF WARRANTY

NATIONAL COMFORT MAKES NO OTHER WARRANTIES, EXPRESS OR IMPLIED, ORAL OR WRITTEN, RELATED TO THE GOODS, INCLUDING ANY WARRANTY OF MERCHANTABILITY OF FITNESS FOR A PARTICULAR PURPOSE, WHICH ARE EXPRESSLY DISCLAIMED. NATIONAL COMFORT SHALL NOT BE LIABLE FOR SPECIAL, INCIDENTAL, OR CONSEQUENTIAL DAMAGES OR LOSSES FROM ANY CAUSE WHATSOEVER, INCLUDING, WITHOUT LIMITATION, LOSS OF USE, COMMERCIAL PROFITS, OR CUSTOMER GOODWILL, AND ANY OTHER CLAIMS BASED ON CONTRACT OR TORT, WHETHER OR NOT ARISING FROM NATIONAL COMFORT'S NEGLIGENCE.

National Comfort shall not be liable for damages caused by delay in performance and the remedies of Customer set forth in this agreement are exclusive. In no event, regardless of the form of the claim or cause of action (whether based in contract, infringement, negligence, strict liability, other tort or otherwise) shall National Comfort's liability to Customer and/or its customers exceed the price paid by Customer for the specific goods or portion of the goods provided by National Comfort giving rise to the claim or cause of action, and Customer shall indemnify and hold harmless National Comfort for any damages incurred by National Comfort in excess thereof. Customer agrees that in no event shall National Comfort's liability to Customer and/or its customers extend to include incidental, consequential, or punitive damages.

Continued on next page

The term "consequential damages" shall include, but not be limited to, loss of anticipated profits, business interruption, loss of use, revenue, reputation and data, costs incurred, including without limitation, for capital, fuel, power and loss or damage to capital or equipment. Customer agrees that all instructions and warnings supplied by National Comfort will be passed on to those persons who use the Goods. National Comfort's Goods are to be used in their recommended applications and all warning labels adhered to the Goods by National Comfort are to be left intact.

It is expressly understood that any technical advice furnished by National Comfort before or after delivery in regard to the use or application of the Goods is furnished without charge, and National Comfort assumes no obligation or liability for the advice given or results obtained, all advice being given and accepted at Customer's sole risk.

6. WARRANTY PROCEDURE

For All Warranty Claims. Customer must register the product with National Comfort within 60 days from purchase. Failure to timely register the product may void the warranty. Any claim for warranty shall be made within thirty days of discovery and in any event, within thirty days from removal of the compressor or part from the unit. Failure to make a timely claim shall void the warranty. Prior authorization from National Comfort is required for all warranty claims. Any claim for warranty must be first reported to National Comfort in writing specifying the unit, serial number, date of purchase and date of original installation. Customer shall also request a Return Material Authorization ("RMA") from National Comfort to initiate the warranty claim process. Issuance of an RMA by National Comfort is not an acknowledgment that the defect is covered by this Warranty. Any replacement compressor or part is warranted for the original product warranty, or for one year from the date of shipment of the replacement compressor/part, whichever is later.

A. Heat Exchangers. In addition to the above-reference requirements, customer is also required to purchase a replacement heat exchanger and return the original heat exchanger to National Comfort at National's discretion, freight prepaid. If National Comfort determines that there is a defect in material or workmanship in the heat exchanger that is covered by this Warranty, then National Comfort shall credit Customer for the cost of the new replacement heat exchanger. If National Comfort determines that the defect in material or workmanship is not covered by this Warranty, then no credit shall be issued. A copy of the invoice of the replacement heat exchanger and completed RMA must accompany the original heat exchanger for which warranty is claimed. National Comfort reserves the right to request additional documentation. The failure to follow this procedure shall render the warranty void.

B. Compressors. In addition to the above-referenced requirements, Customer is also required to purchase a replacement compressor and return the original compressor to National Comfort at National's discretion. If the defect is reported to National Comfort within one year from the date of original installation or within 20 months from the date of manufacture of the compressor (as determined by the compressor serial number), whichever occurs first, then Customer may take the compressor to any Authorized Copeland Distributor for replacement of said compressor. If the defect is reported to National Comfort after one year from the date of installation or after 20 months from the date of manufacture of the compressor (as determined by the compressor serial number), whichever occurs first, but before the expiration of five years from the date of installation, then the compressor should be returned to National Comfort at National's discretion and Customer shall purchase a new compressor. If National Comfort determines that there is a defect in material or workmanship that is covered by this Warranty, then National shall credit Customer for the cost of the new replacement compressor. If National Comfort determines that the defect in material or workmanship is not covered by this Warranty, then no credit shall be issued. A copy of the invoice of the replacement compressor and completed RMA must accompany the compressor. National Comfort, at its sole discretion, may also require Customer to supply the compressor tag. The failure to follow this procedure shall render the warranty void.

B. Other Parts. In addition to the above-referenced requirements, Customer is required to purchase a replacement part for the original part for which Customer is making a warranty claim. The original part for which warranty is claimed is to be returned to National Comfort at National's discretion, freight prepaid. If National Comfort determines that there is a defect in material or workmanship in the part that is covered by this Warranty, then National Comfort shall credit Customer for the cost of the new replacement part. If National Comfort determines that the defect in material or workmanship is not covered by this Warranty, then no credit shall be issued. A copy of the invoice of the replacement part and completed RMA must accompany the original part for which warranty is claimed. National Comfort reserves the right to request additional documentation. The failure to follow this procedure shall render the warranty void.

7. SHIPPING INSTRUCTIONS

A. Compressors. Returned compressors must be totally secured by use of shipping lugs taken from the replacements compressors and clearly marked with the RMA number. Do not use tape, rags or putty to seal the compressor. Line connections should be sealed with rubber plugs. All compressors must be securely bolted, banded, and stretch wrapped to a skid in the upright position.

B. **Parts.** All other returned parts must be securely packaged and clearly marked with its corresponding RMA number provided from NCP.

5 YEAR WARRANTY ON PARTS

5 YEAR WARRANTY COMPRESSOR

20 YEAR WARRANTY HEAT EXCHANGER

AHRI CERTIFIED® www.ahridirectory.org
Unitary Small AC
AHRI Standard 210/240
Certification applies only when the complete system is listed with AHRI.

AHRI CERTIFIED® www.ahridirectory.org
Residential Furnaces
DOE 10 CFR Part 430

ETL LISTED C US
Intertek
53533

National Comfort Products

An AeriTek Brand

539 Dunksferry Road | Bensalem, PA 19020-5908

(800) 523-7138 | www.nationalcomfortproducts.com